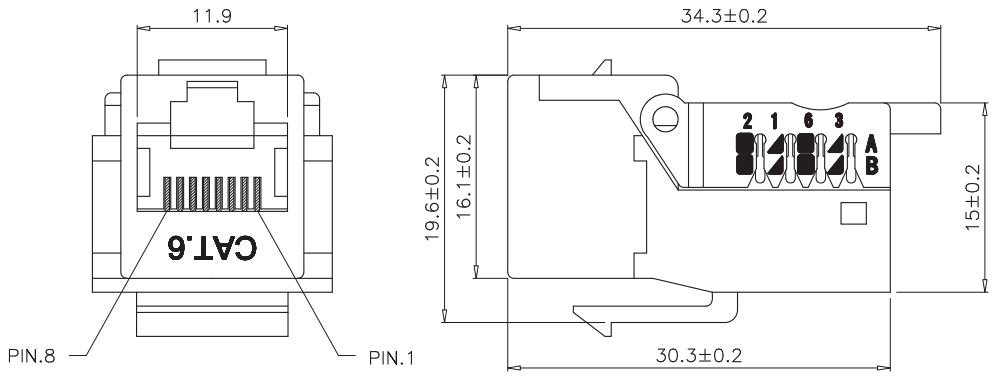

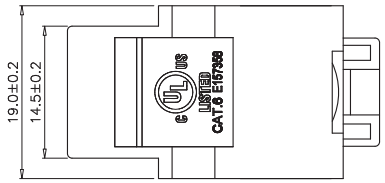

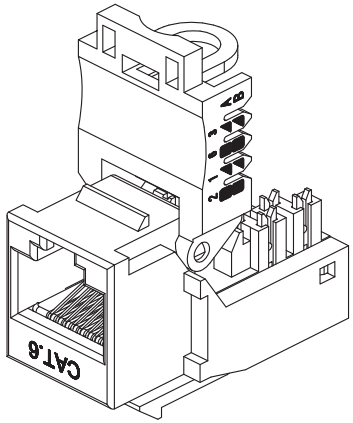

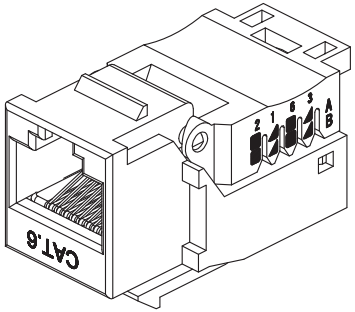

Material:

1 RJ45 Jack Housing: ABS, UL94V-0
- with optional color

2. Jack Bracket Set: PBT, UL94V-0
3. RJ45 Jack Contact Material & Finished
   - Phosphor Bronze
   - Contact area: Min. 3MM 50 Micro-inch Gold plated over Nickel plated
4. IDC Housing: PC, 94V-2
5. IDC Terminal material & finished:
   - Phosphor Bronze w/Min. 50 Micro-inch Tin plated
   - Suitable for 23-24AWG stranded & solid wire
6. IDC CAP: PC, UL94V-2

Electrical:

- Wiring: T568A & T568B
- Insertion Force: 900 GM for 8 contacts
- Retention Strength: 7.7Kg between Jack & Plug
- Operating Temperature: -10°C ~ +60°C
- Durability: Jack: 750 cycles Plug-Jack mating and unmating test, Insertion cycles at 20 cycles/ minute max. Contact resistance test per 100 cycles.
- The Cat.5e transmission performance is in compliance with the ANSI/TIA/EIA 568 B.2-1 standard

Unit: MM±0.1MM

DIGITUS®

RoHS Complaint

Scale	1:1
TOLERANCE	
X.X	±0.40
X.XX	±0.25
X.XXX	±0.15
Angle	±3°

Modification	Date	Name

		Name
Drawn	12.20.11	Chappell
Approved		

ASSMANN WSW components

Item No.

DN-93601-U/BL

Title: Cat6 Unshielded Keystone Jack - 90° Tool Free Type, Black

Drawing No.

rev00

Replace

Sheet