| ITEM | CONNECTOR PART NO. | DESCRIPTION | IPI CHECK | EOR CHECK | Applicable Tooling |
|---|---|---|---|---|---|
| 1 | RSFP-2-LM | RSF CONNECTOR BLACK HOUSING, W-W | | | APPLICATOR |
| 2 | SRSF-61-250A | RSF CONTACT - BRASS | | | |
| 3 | UL1015, 16 AWG | BLACK | | | |

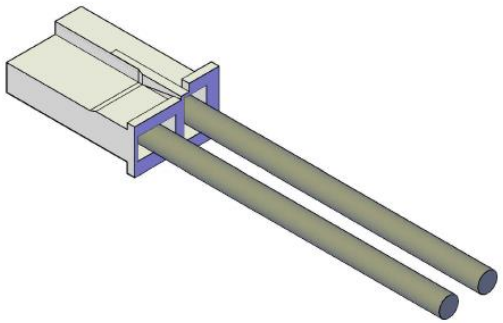

## SUGGESTED MATING TAB

NO SCALE

| | WITHOUT STABILIZER | WITH STABILIZER |
|---|---|---|
| DIM. "A" | 2.20 [0.087] MIN. | 4.20±0.15 [0.165±0.006] |
| DIM. "B" | 7.40 [0.291] MIN. | 7.98 [0.314] MIN. |
| DIM. "C" | 5.90 [0.232] MAX. | (7.6) |

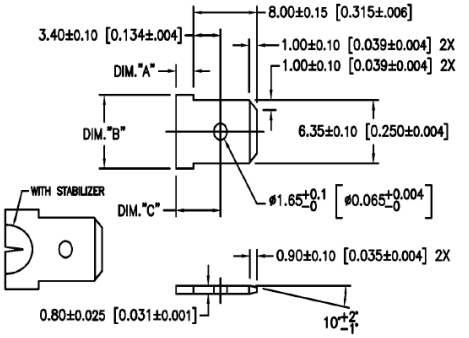


MATING TAB NOTES:
4. MAT'L: BRASS.
FINISH: SUGGESTED NO PLATING.

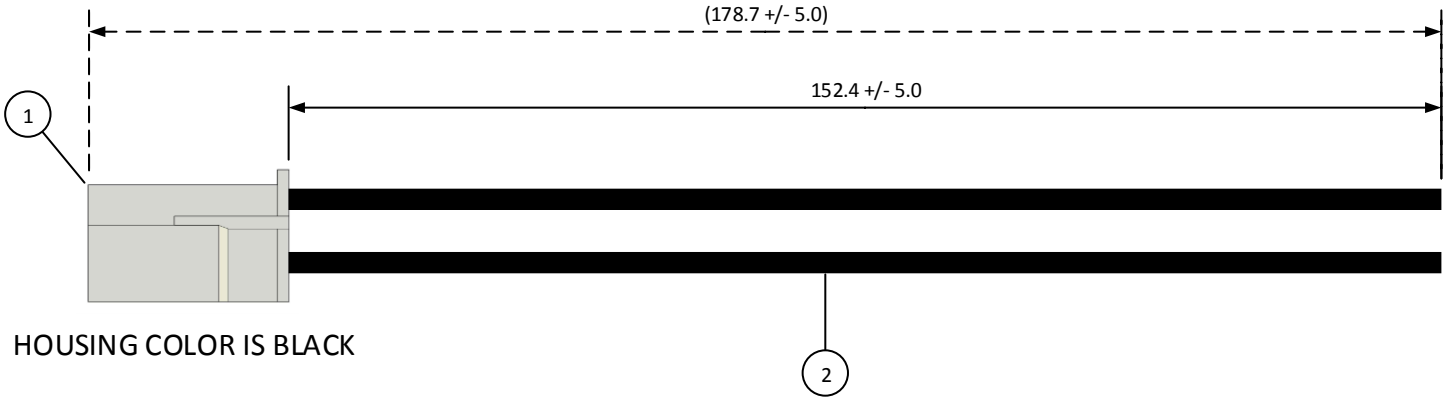


HOUSING COLOR IS BLACK

| SCALE | CUSTOMER NAME | CUSTOMER PART NO. |
|---|---|---|
| 1: 1 | | |
| DIMENSIONS: All dimensions are in MM with a tolerance of +/- 3.0 unless otherwise specified. | DESCRIPTION: 6" INSIDE LENGTH – 2 POSITION, LIF, POS LOCK, .250, W-W INSULATED PLUG W/BLUNT LEADS, BLACK HSG MATES W/W-W RECPT 02RSFR16K152K | |
| DRAWN BY: STEVEN PILKINGTON | ASSEMBLY PART NO.: A02RSFP16K152K | |
| CHECKED BY: JUSTIN BAKER | DRAWING NO. & REVISION: GAM-140 | REVISED: 3/15/2016 |

| REV. | DESCRIPTION | DATE | BY |
|---|---|---|---|
| | | | |