Alle Rechte vorbehalten/ *All rights reserved*

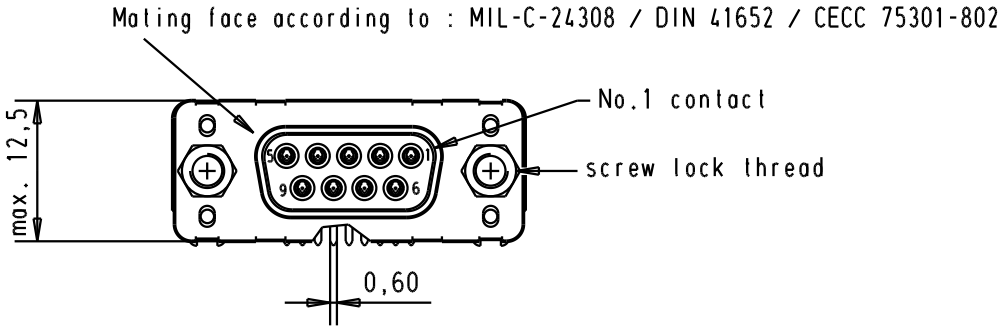


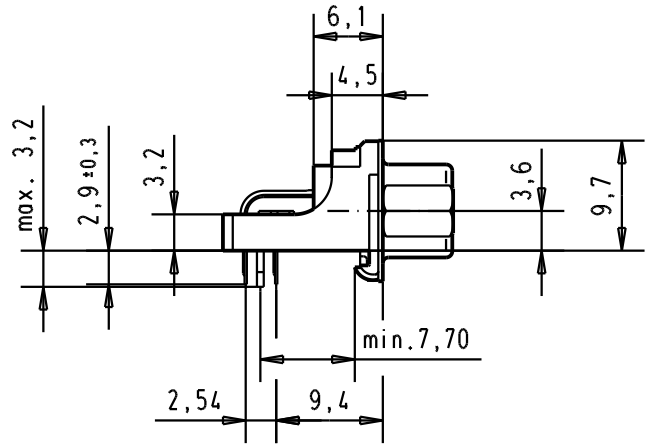


Printed board layout
component side

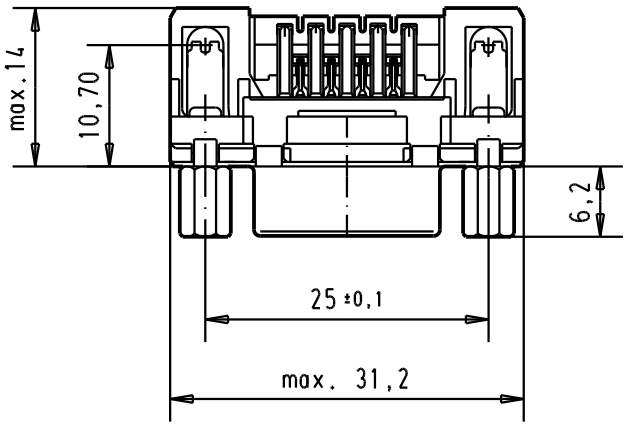


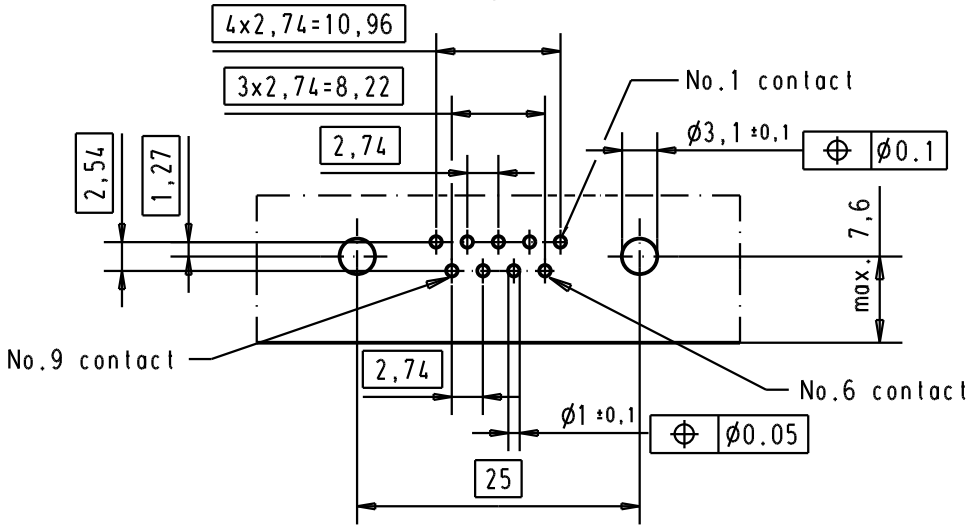


Connector retention and insertion forces on the PCB = 25 / 80 newtons

| Part number | Screw lock thread | Performance level | Mod. | Dat. | Name |
|---|---|---|---|---|---|
| 09 66 156 3617 | 4-40 UNC | 1 | | | |
| 09 66 156 6617 | 4-40 UNC | 2 | 31892 | 05/05/04 | JH |
| 09 66 156 7617 | 4-40 UNC | 3 | 29723 | 05/03/02 | CV |

| | Dat. | Name |
|---|---|---|
| Detail. | 05/03/02 | CV |
| Insp. | | |
| Stand. | | |

All Dim. in mm
Orig. Size DIN A 4

D-Sub, high temperature, female, low profil, 9 poles, with solder pins 2.9, screw lock and grounding board lock.

Maßstab/ *Scale* 1.5:1

HARTING EURL
F-95972 Paris

TB 0966156x61x

Sub.

Blatt/ *Page* 3