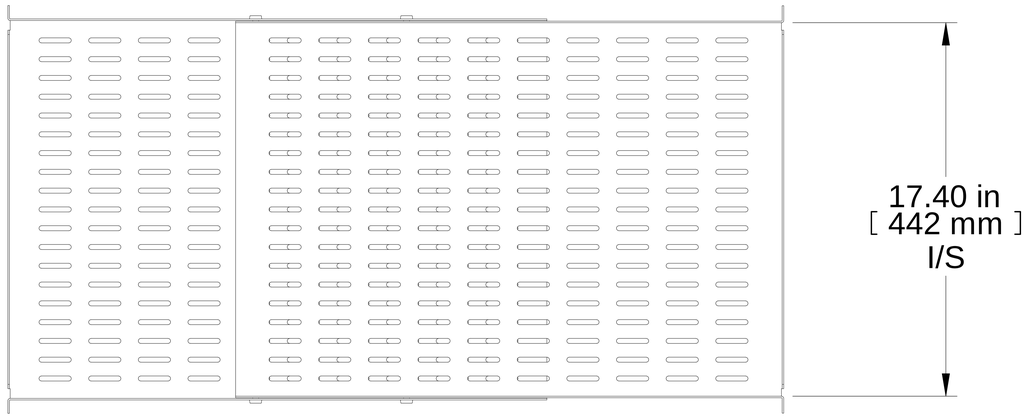

TOP VIEW

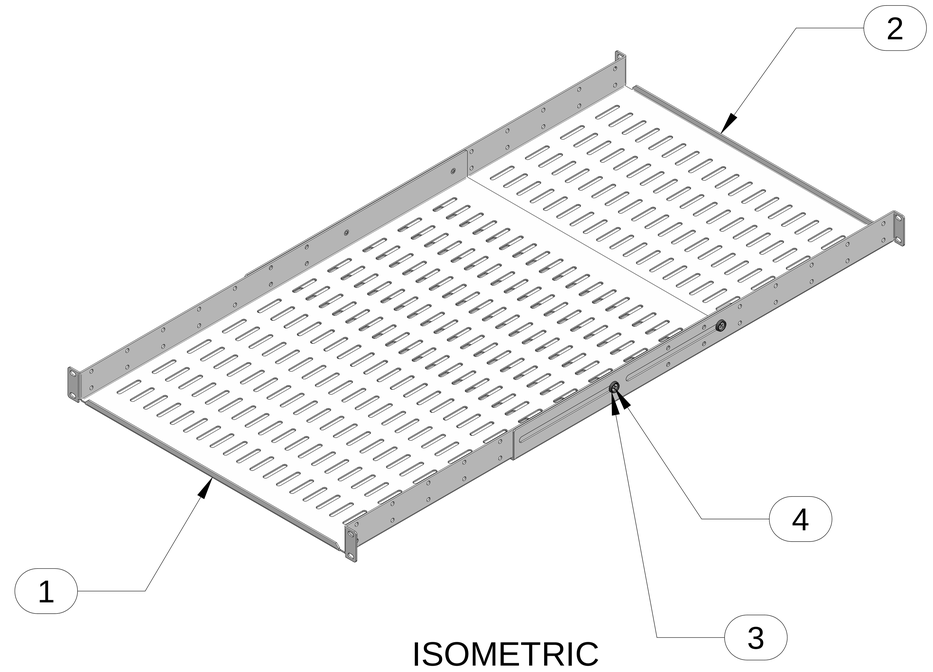

ISOMETRIC

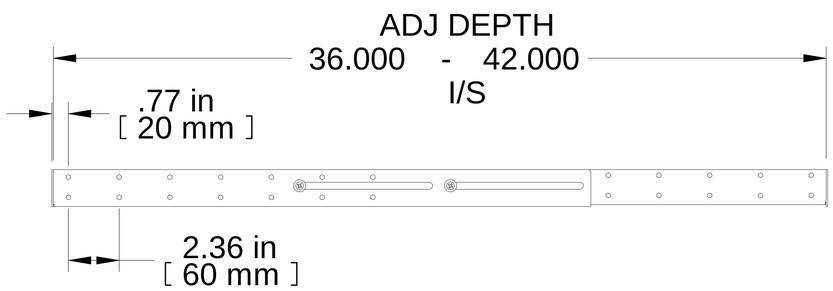

L.S. VIEW

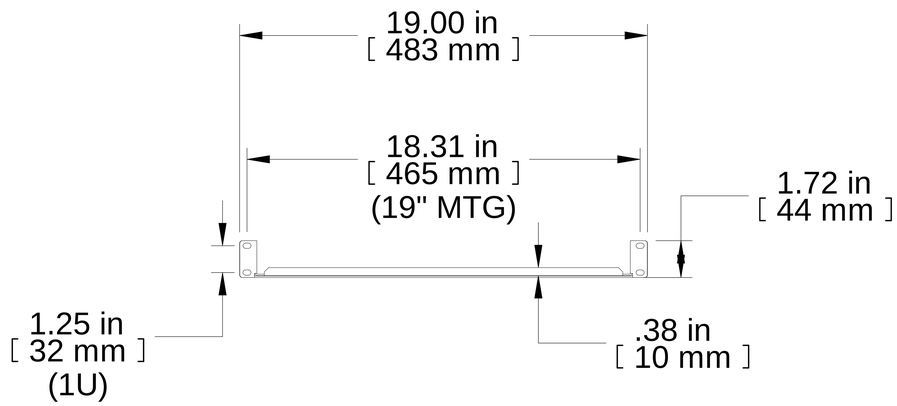

FRONT VIEW

Item Number	Title	Quantity
1	ADSV - VENTED SHELF FRONT (3642)	1
2	ADSV - VENTED SHELF REAR (3642)	1
3	#10 CUP WASHER BLK NYLON	4
4	SCREW - 10-32 X 1/4" CSK PH ZP	4

PART NUMBERS

ADSV3642BK	PAINTED BLACK TEXTURED

NOTES

Maximum Weight Load: 350 lb
Mounting Hardware Not Included
See Hammond Website for More Information

Français

Pour tous les détails sur nos produits,
svp veuillez consulter notre site www.hammondmfg.com

Data subject to change without notice. Isometric drawing not to scale.
Les données sont sujettes à changement sans préavis.

HAMMOND MANUFACTURING®

www.hammondmfg.com

PART NO. **ADSV3642BK**