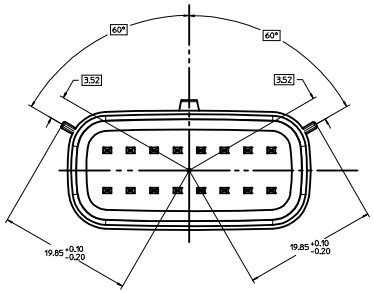

KEYING OPTION A
SCALE 4:1

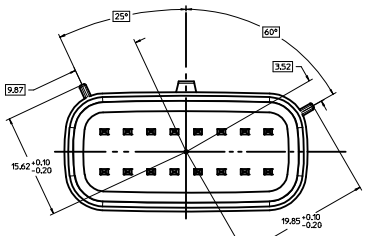

KEYING OPTION B
SCALE 4:1

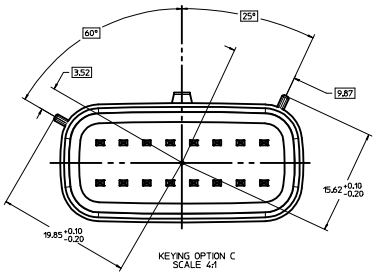

KEYING OPTION C
SCALE 4:1

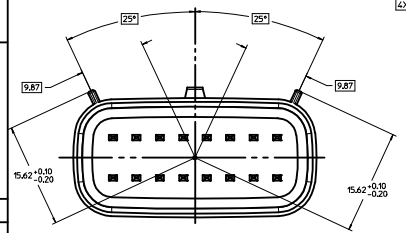

KEYING OPTION D
SCALE 4:1

B2

150-S-016-2-D01	D	BLACK
150-S-016-2-C01	C	DK GRAY
150-S-016-2-B01	B	LT GRAY
150-S-016-2-A01	A	BLACK
EWCAP P/N	OPTION	MATING CONNECTOR COLOR

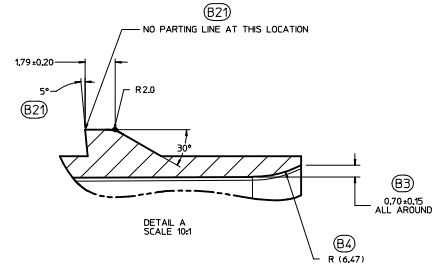

DETAIL A
SCALE 10:1

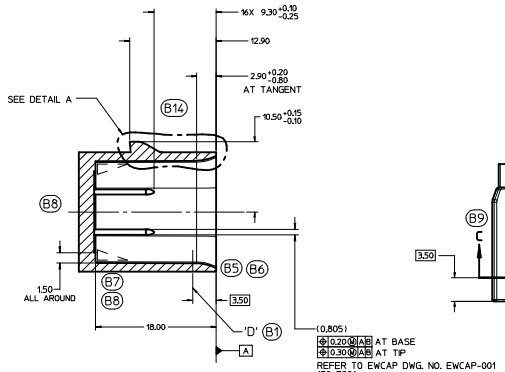

SECTION A-A

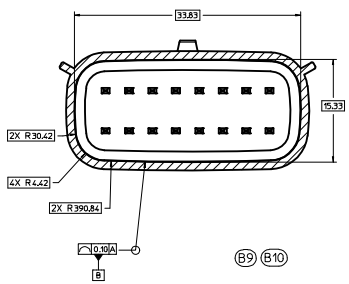

SECTION C-C
SCALE 4:1

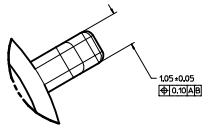

DETAIL C
SCALE 20:1
APPLIES 2X
SEE KEYING OPTION VIEWS
FOR POSITIONS

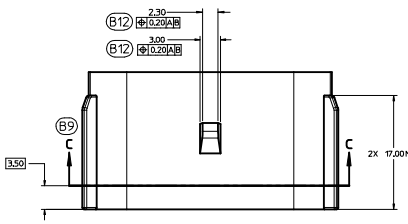

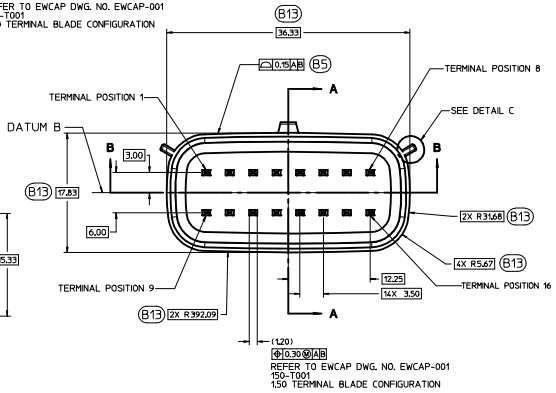

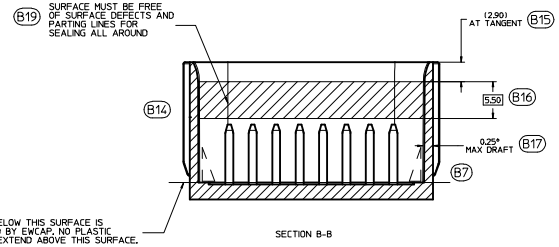

SECTION B-B

IF HEADER IS RECESSED INTO A POCKET, THESE DIMENSIONS REPRESENT
THE MINIMUM CLEARANCE REQUIRED FOR THE MATING CONNECTOR SHROUD.

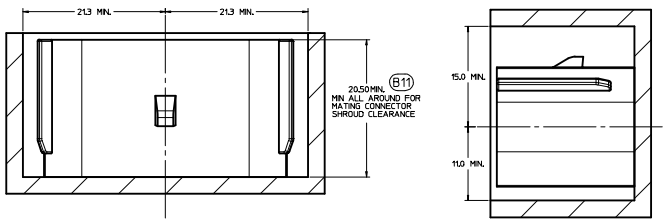

PACKAGING FRAME

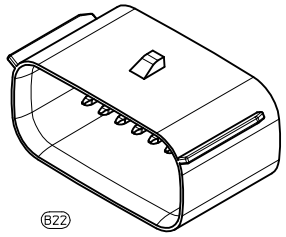

B22

NOTICE

THIS DRAWING OR PORTIONS OF IT, ARE CONTROLLED BY THE ELECTRICAL WIRING COMPONENTS APPLICATION PARTNERSHIP (EWCAP). A SUBGROUP OF THE UNITED STATES CONSORTIUM FOR AUTOMOTIVE RESEARCH LLC (USCAR). USCAR IS A PARTNERSHIP BETWEEN CHRYSLER GROUP LLC, FORD MOTOR COMPANY, AND GENERAL MOTORS CORPORATION ANY CHANGE TO A EWCAP CONTROLLED PORTION OF THIS DRAWING, INCLUDING A "RECORD CHANGE" MUST BE APPROVED, IN WRITING, BY THE RESPONSIBLE EWCAP MEMBER FROM EACH USCAR COMPANY. EACH EWCAP MEMBER AUTHORIZED TO SIGN FOR HIS OR HER COMPANY IS RESPONSIBLE FOR OBTAINING ALL NECESSARY APPROVALS WITHIN THAT COMPANY PRIOR TO SIGNING FOR APPROVAL OF THE CHANGE. EWCAP EXPRESSLY PROHIBITS ANY PARTY FROM CHANGING EITHER ANY EWCAP CONTROLLED PORTION OF THIS DRAWING OR ANY ASSOCIATED TOOLING BEFORE RECEIVING AN APPROVAL SIGNED BY AN AUTHORIZED REPRESENTATIVE FROM EACH EWCAP PARTNER. REFERENCE TO THE SIGNED APPROVAL FORM MUST BE ENTERD IN THIS DRAWING'S CONTROL COLUMN. B20

NOTES: UNLESS OTHERWISE SPECIFIED B18

1. ALL DIMENSIONS SHOWN IN MILLIMETERS.
2. DIMENSIONING AND TOLERANCING PER ASME Y14.5M-1994
3. 0.25 RADII ON ALL CORNERS SHOWN SHARP.
4. UNSPECIFIED RADII: 0.25 EXCEPT AS NOTED.
5. STANDARD COLORS FOR POLARIZATION (SEE CHART). DEVIATION REQUIRES APPROVAL OF AUTHORIZED PERSON.
6. REFER TO "SAE/USCAR 12 CONNECTOR GUIDELINES" FOR ADDITIONAL REQUIREMENTS.
7. EXCEPT WHERE NOTED, DRAFT ON OUTSIDE SURFACES IS PERMISSIBLE WITHIN TOLERANCE.
8. ⊿ SYMBOL INDICATES DRAFT DIRECTION.
9. FOR TERMINAL MATERIAL, DIMENSIONAL, AND COATING REQUIREMENTS AND ANY BLADE TERMINAL DESIGN INFORMATION NOT SHOWN ON THIS DRAWING SEE EWCAP DRW. NO. EWCAP-001
10. A FULL SHROUD ON THE MATING CONNECTOR IS REQUIRED TO INSURE THAT THE CONNECTOR-HEADER POLARIZATION FEATURES (OPTIONS A THRU D) WILL FUNCTION. THE FULL SHROUD ALSO PREVENTS SCOOP DAMAGE TO THE HEADER PINS. REFER TO "SAE/USCAR-12 CONNECTOR DESIGN GUIDE LINES" FOR ADDITIONAL INFORMATION.
11. REFER TO USCAR/EWCAP PART LIST AS FOUND ON WEBSITE http://www.uscarteams.org
12. THIS IS A 100% CAD GENERATED PART. THE CAD MATHEMATICAL DATA IS THE MASTER FOR THIS PART. FOR DIMENSIONAL OR ANY INFORMATION NOT SHOWN ON THIS DRAWING, ANALYZE THE CAD MODEL.

molex

CHANGE SERIAL NUMBER	LET	REVISION RECORD	DATE	DWN	CHK
095	B22	CHANGED ISO VIEW SCALE TO 4:1 WAS 1:1			
095	B21	ADDED PARTING LINE NOTE TO DETAIL A, REMOVED NOTE BACK ANGLE OPTIONAL FROM 5°			
095	B20	CORRECTED CHRYSLER GROUP LLC NOMENCLATURE			
095	B19	MOVED NOTE TO SECTION B-B			
095	B18	UPDATED NOTES			
095	B17	ADDED 0.25° MAX DRAFT ANGLE ALL AROUND			
095	B16	ADDED 5.50			
095	B15	ADDED AT TANGENT NOTE			
095	B14	REMOVED DATUM D			
095	B13	ADDED BASIC DIMENSIONS FOR PROFILE CONTROL			
095	B12	ADDED 0.20 A B			
095	B11	DIMENSIONED TO DATUM A			
095	B10	SEALING SURFACE DIMENSIONS MOVED TO SECTION C-C			
095	B9	ADDED SECTION C-C			
095	B8	REMOVED 15.20 AND 2.50 FROM SECTION A-A			
095	B7	ADDED DRAFT ANGLE DIRECTION			
095	B6	REMOVED 0.80 +0.10/-0.20 ALL AROUND			
095	B5	REPLACED WALL THICKNESS CONTROL WITH PROFILE OF A SURFACE			
095	B4	ADDED R(6.47)			
095	B3	ADDED 0.70 ±0.15 ALL AROUND			
095	B2	UPDATED CONNECTOR COLORS			
095	B1	SURFACE 'D' RELOCATED TO 3.50 WAS AT 8.20	03-22-12	KC	MV
	A	RELEASED	10-31-02	DG	JC

TOLERANCES (UNLESS OTHERWISE SPECIFIED)
DIMENSIONS ARE IN MILLIMETERS
ANGLES ±3°
.X ±0.2 .XX ±0.10

THIRD ANGLE PROJECTION

EWCAP

SCALE	DRAWN BY	CHECKED BY	DATE
4 - 1	K.CUNNINGHAM	M.VANSLAMBROUCK	03-22-12

TITLE
DIRECT CONNECT INTERFACE
16 WAY (2 X 8) 1.5MM SEALED MALE

SHEET	DRAWING NUMBER	SIZE		REVISION LEVEL
1 OF 1	150-S-016-2-Z01	E	DO NOT SCALE DRAWING COMPUTER AIDED DRAWING	B

TABLE OF CONTENTS	
SHEET NO.	SHEET DESCRIPTION
1	NOTES
2	KEY CONFIGURATIONS
3	RECEPTACLE SEALED ASSEMBLY
4-6	BOM

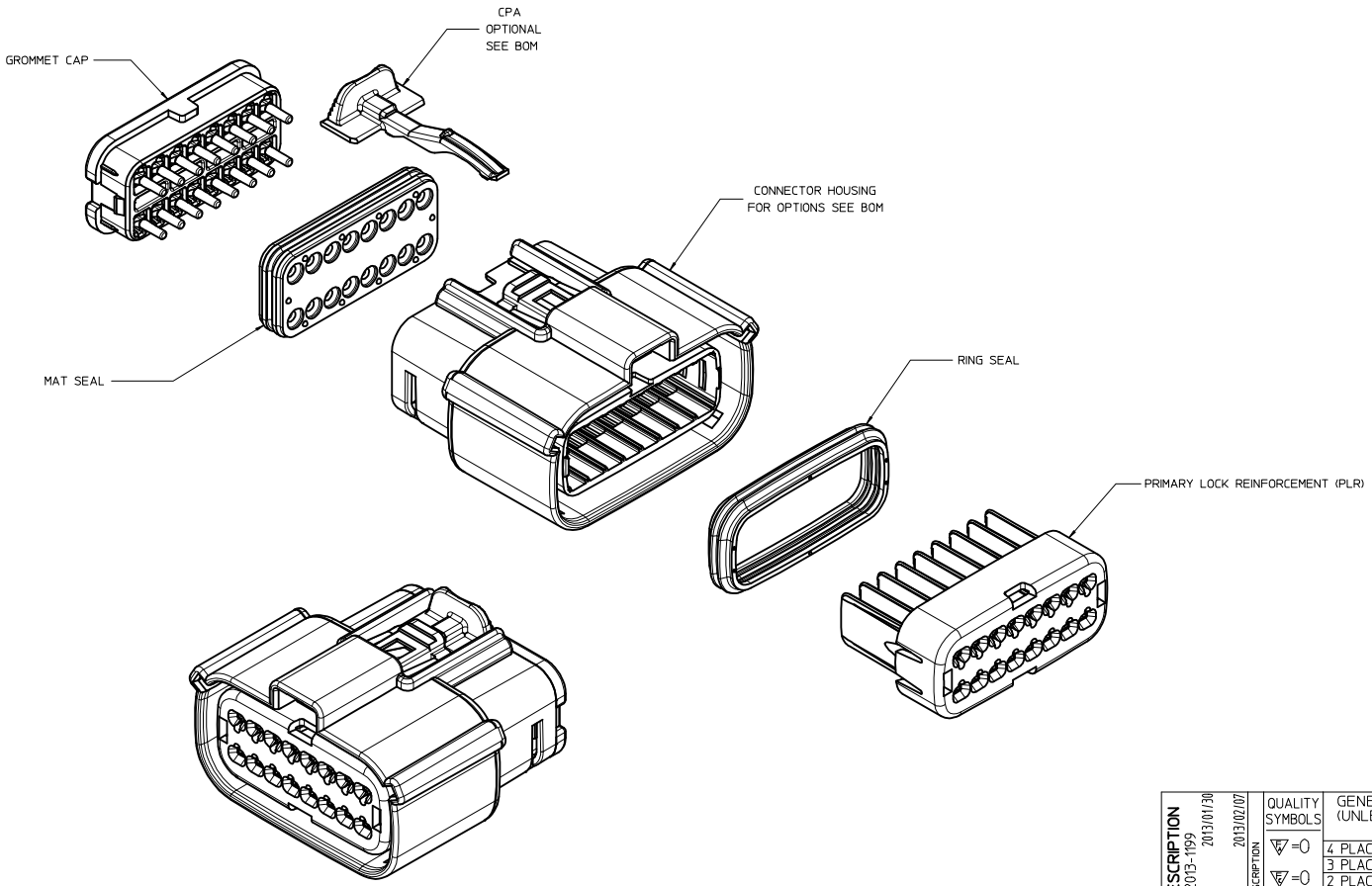

NOTES: VALID UNLESS OTHERWISE SPECIFIED

1. GENERAL:
a. APPLICATION SPECIFICATION SEE: AS-33472-100
-CONTAINS: PRODUCT INTRODUCTION, PRODUCT SUMMARY, CONNECTOR ASSEMBLY, PACKAGING INFORMATION, CONNECTOR MATING, SERVICE INSTRUCTIONS, ELECTRICAL CONTINUITY CHECKING, CRIMPING, AND TROUBLESHOOTING.
-DESIGNED TO MATE WITH DEVICE CONNECTION AS SPECIFIED IN DRAWING EWCAP 150-S-016-2-Z01, AVAILIBLE AT <http://ewcap.uscarteams.org/>.
-DESIGNED TO MATE WITH BLADE SEALED ASSEMBLY AS SPECIFIED IN DRAWING SD-33482-161
-FOR 1.5mm RECEPTACLE TERMINALS TO BE USED WITH THIS ASSEMBLY SEE MOLEX DRAWING SD-33012-002.
-SYSTEM TO BE USED WITH WIRE WITHIN DIAMETER RANGE OF 1.2 mm TO 2.69 mm.
-ASSEMBLY SHIPPED WITH PLR AND CPA IN PRE-LOCK POSITION (SEE SECTION Z-Z PRE-LOCK).
-IN THE EVENT THAT THE PLR IS FOUND IN THE SEATED (FINAL LOCK) POSITION, REFER TO MOLEX SPECIFICATION PS-34646-001, AVAILABLE AT www.molex.com <http://www.molex.com>.
-ASSEMBLY CONFORMS TO SAE/USCAR-2 REV.4 WITH THE FOLLOWING EXCEPTIONS:
ENGAGEMENT FORCE TO MOVE CPA FROM PRE-LOCK TO FINAL LOCK POSITION WHEN UNMATED: 40N MIN.
DISENGAGEMENT FORCE TO MOVE CPA FROM FINAL LOCK TO PRE-LOCK POSITION: 3N MIN, 40N MAX.
TERMINAL INSERTION FORCE FOR WIRE DIAMETER ABOVE 2.5mm NOT EXCEEDING 2.69mm SHALL NOT EXCEED 40 NEWTONS.
b. PRODUCT SPECIFICATION SEE: PS-33472-000
CONTAINS: PRODUCT INTRODUCTION, PRODUCT SUMMARY, RATINGS (CURRENT, TEMPERATURE, SEALING, AND FLAMMABILITY), AND PRODUCT VALIDATION.
c. PACKAGING SPECIFICATION PER MOLEX DRAWING: PK-31300-903
d. PARTS MUST BE IN COMPLIANCE TO MOLEX CHEMICAL SUBSTANCES FOR PRODUCTS AND PACKAGING SPECIFICATION: ES-40000-5016
e. DATA MUST BE SUBMITTED UNDER THE MOLEX PART NUMBER TO IMDS (COMPANY ID#13255)

2. DESIGN - MATERIALS:
a. CONNECTOR HOUSING, GROMMET CAP, PRIMARY LOCK REINFORCER (PLR): SPS/NYLOM BLEND, 20% GLASS FILLED
b. MAT SEAL, RING SEAL: INHERENTLY LUBRICATED SILICONE
c. CPA: PBT 20% GLASS FILLED

3. DESIGN - GEOMETRY:
a. THIS IS A 100% CAD GENERATED PART. THE CAD MATHEMATICAL DATA IS THE MASTER FOR THIS PART. FOR DIMENSIONAL OR ANY INFORMATION NOT SHOWN ON THIS DRAWING, ANALYZE THE CAD MODEL.
b. GEOMETRIC DIMENSIONS AND TOLERANCES PER ASME Y14.5M - 1994
c. EDGES AND UNDIMENSIONED DETAILS PER ISO13715
d. CORNERS SHOWN AS SHARP TO BE R 0.2 MAX.
e. LETTERING SHALL BE 0.15 MAX RAISED IN 0.25 MAX RECESS PAD. THIS INCLUDES RECYCLING CODE, CAVITY ID, VENDOR IDENTIFICATION, AND CUSTOMER MATERIAL NUMBER.
f. VISUAL DEFECTS SHALL MEET COSMETIC STANDARD PS-45499-002 (Class B)
g. LASER MARKING: TBD

INSPECTION NUMBER LOG
LAST NUMBER USED:
ADDED:
REMOVED:

REV	DESCRIPTION		
AS8	ADDED PIN OUT	33472-1826	33472-1827
		33472-1828	33472-1829
		33472-1830	33472-1831
AS8	ADDED PIN OUT	33472-1818	33472-1819
		33472-1820	33472-1821
		33472-1822	33472-1823
		33472-1824	33472-1825
AS7	UPDATED DIMENSIONS TO MATCH MODEL		
AS6	ADDED PIN OUT	33472-1811	33472-1812
		33472-1813	33472-1814
		33472-1815	33472-1816
		33472-1817	
AS5	ADDED PIN OUT	33472-1806	33472-1807
		33472-1808	33472-1809
		33472-1810	

ENTER DESCRIPTION
EC NO: UAU2013-1999 2013/01/30
DRWN: TYE
CHKD:
APPR: VKOSHY 2013/02/07
DESCRIPTION
REV
AS9

QUALITY SYMBOLS
4 =0
3 =0
2 =0
1 =0

GENERAL TOLERANCES (UNLESS SPECIFIED)

	mm	INCH
4 PLACES	± ---	± ---
3 PLACES	± ---	± ---
2 PLACES	± 0.10	± ---
1 PLACE	± 0.3	± ---
0 PLACE	±	±

ANGULAR ± 3 °
DRAFT WHERE APPLICABLE MUST REMAIN WITHIN DIMENSIONS

DIMENSION STYLE: MM ONLY
SCALE: 3:1
DESIGN UNITS: METRIC
THIRD ANGLE PROJECTION

DRAWN BY	DGRIFFITHS	DATE 05-29-03
CHECKED BY	DGRIFFITHS	DATE 05-29-03
APPROVED BY	VKOSHY	DATE 2010/10/27
MATERIAL NO.	SEE BOM	

TITLE: MX150 2X8 RECEPTACLE SEALED ASSEMBLY MAT SEAL

molex

DOCUMENT NO. SD-33472-161
SHEET NO. 1 OF 7
SIZE D

THIS DRAWING CONTAINS INFORMATION THAT IS PROPRIETARY TO MOLEX INCORPORATED AND SHOULD NOT BE USED WITHOUT WRITTEN PERMISSION

KEY CONFIGURATIONS

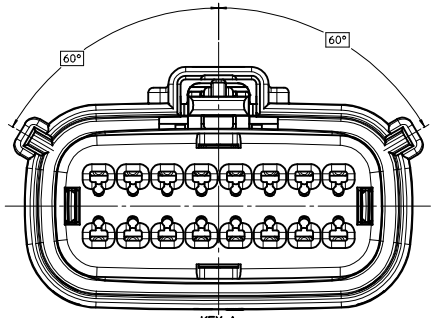

KEY A

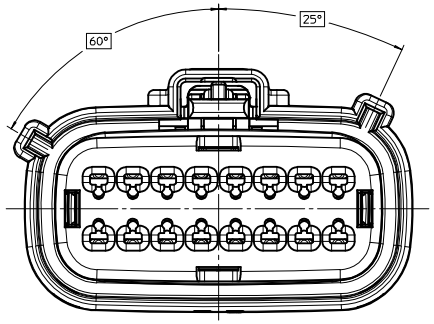

KEY B

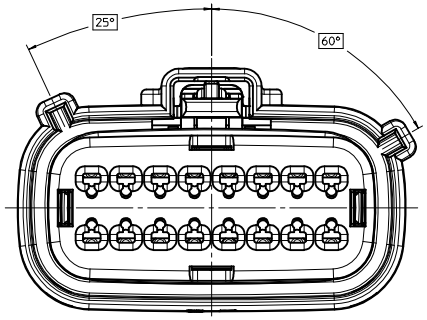

KEY C

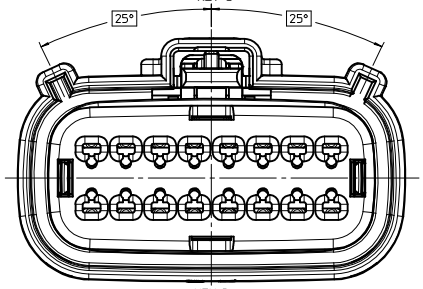

KEY D

ENTER DESCRIPTION EC NO: UAU2013-1999 DRWN:TYE 2013/01/30 CHKD: APPR:VKOSHY 2013/02/07 DESCRIPTION AS9 REV	QUALITY SYMBOLS =0 =0 =0	GENERAL TOLERANCES (UNLESS SPECIFIED) mm / INCH 4 PLACES ± --- / ± --- 3 PLACES ± --- / ± --- 2 PLACES ± 0.10 / ± --- 1 PLACE ± 0.3 / ± --- 0 PLACE ± / ± ANGULAR ± 3 ° DRAFT WHERE APPLICABLE MUST REMAIN WITHIN DIMENSIONS	DIMENSION STYLE MM ONLY DRAWN BY DGRIFFITHS DATE 05-29-03 CHECKED BY DGRIFFITHS DATE 05-29-03 APPROVED BY VKOSHY DATE 2010/10/27 MATERIAL NO. SEE BOM SIZE D	SCALE 4:1 DESIGN UNITS METRIC THIRD ANGLE PROJECTION TITLE MX150 2X8 RECEPTACLE SEALED ASSEMBLY MAT SEAL molex DOCUMENT NO. SD-33472-161 SHEET NO. 2 OF 7 THIS DRAWING CONTAINS INFORMATION THAT IS PROPRIETARY TO MOLEX INCORPORATED AND SHOULD NOT BE USED WITHOUT WRITTEN PERMISSION	

RECEPTACLE SEALED ASSEMBLY

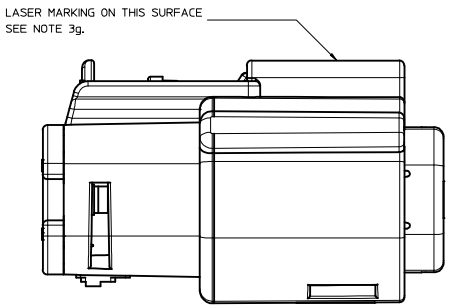

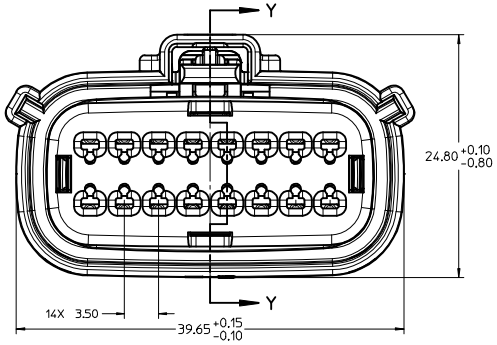

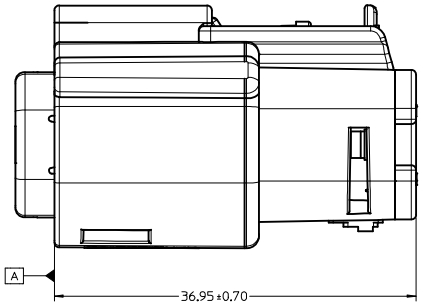

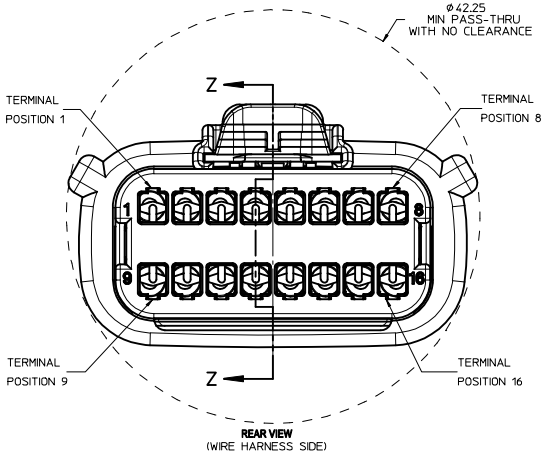

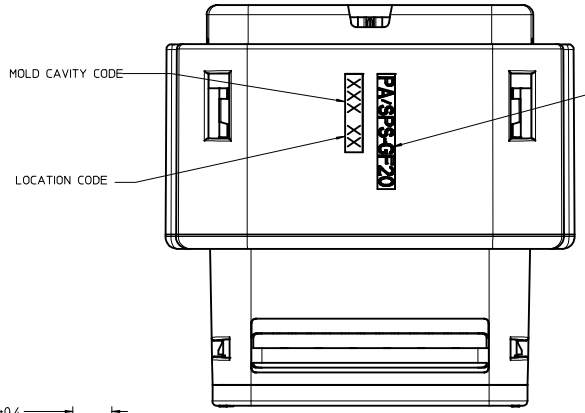

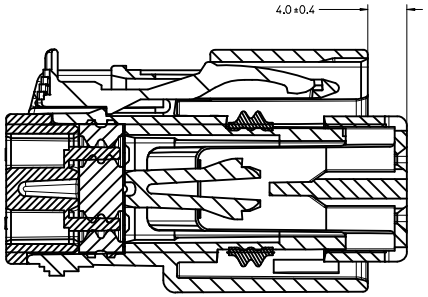

PRIMARY LOCK REINFORCEMENT (PLR) SHOWN
IN PRE-STAGED POSITION

SECTION Z-Z

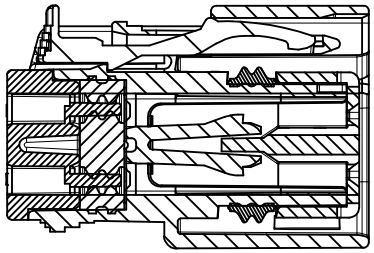

PRIMARY LOCK REINFORCEMENT (PLR) SHOWN
IN FINAL-LOCK POSITION

SECTION Y-Y

ENTER DESCRIPTION EC NO: UAU2013-1199 DRWN: TYE 2013/01/30 CHKD: APPR: WKOSHY 2013/02/07 DESCRIPTION	QUALITY SYMBOLS =0 =0 =0 =0	GENERAL TOLERANCES (UNLESS SPECIFIED) mm / INCH 4 PLACES ± --- / ± --- 3 PLACES ± --- / ± --- 2 PLACES ± 0.10 / ± --- 1 PLACE ± 0.3 / ± --- 0 PLACE ± / ± ANGULAR ± 3 ° DRAFT WHERE APPLICABLE MUST REMAIN WITHIN DIMENSIONS	DIMENSION STYLE MM ONLY DRAWN BY DGRIFFITHS DATE 05-29-03 CHECKED BY DGRIFFITHS DATE 05-29-03 APPROVED BY VKOSHY DATE 2010/10/27 MATERIAL NO. SEE BOM	SCALE 4:1 DESIGN UNITS METRIC THIRD ANGLE PROJECTION TITLE MX150 2X8 RECEPTACLE SEALED ASSEMBLY MAT SEAL molex DOCUMENT NO. SD-33472-161 SHEET NO. 3 OF 7			
REV AS9			SIZE D	THIS DRAWING CONTAINS INFORMATION THAT IS PROPRIETARY TO MOLEX INCORPORATED AND SHOULD NOT BE USED WITHOUT WRITTEN PERMISSION					

BOM SHEET 1

ASSEMBLY PART NUMBER	COLOR	KEYING OPTION	CPA	CAVITY TYPE & STATUS (X = PLUGGED)																STATUS
				1	2	3	4	5	6	7	8	9	10	11	12	13	14	15	16	
33472-1601	BLACK	A	-																	SALEABLE
33472-1602	LT. GRAY	B	-																	SALEABLE
33472-1603	BROWN	C	-																	NOT RECOMMENDED–SEE P/N 33472-1767
33472-1604	GREEN	D	-																	NOT RECOMMENDED–SEE P/N 33472-1768
~~33472-1605~~			VOIDED																	
33472-1606	BLACK	A	YES																	SALEABLE
33472-1607	LT. GRAY	B	YES																	SALEABLE
33472-1608	BROWN	C	YES																	NOT RECOMMENDED–SEE P/N 33472-1769
33472-1609	GREEN	D	YES																	NOT RECOMMENDED–SEE P/N 33472-1770
~~33472-1610~~			VOIDED																	
33472-1611	BLACK	A	-								X									SALEABLE
33472-1612	LT. GRAY	B	-								X									SALEABLE
33472-1613	BROWN	C	-								X									SALEABLE
33472-1614	GREEN	D	-								X									SALEABLE
~~33472-1615~~			VOIDED																	
33472-1616	BLACK	A	YES								X									SALEABLE
33472-1617	LT. GRAY	B	YES								X									SALEABLE
33472-1618	BROWN	C	YES								X									SALEABLE
33472-1619	GREEN	D	YES								X									SALEABLE
~~33472-1620~~			VOIDED																	
33472-1621	BLACK	A	-	X	X	X	X	X	X	X	X	X	X	X	X	X	X	X	X	SALEABLE
33472-1622	LT. GRAY	B	-	X	X	X	X	X	X	X	X	X	X	X	X	X	X	X	X	SALEABLE
33472-1623	BROWN	C	-	X	X	X	X	X	X	X	X	X	X	X	X	X	X	X	X	SALEABLE
33472-1624	GREEN	D	-	X	X	X	X	X	X	X	X	X	X	X	X	X	X	X	X	SALEABLE
~~33472-1625~~			VOIDED																	
33472-1626	BLACK	A	YES	X	X	X	X	X	X	X	X	X	X	X	X	X	X	X	X	SALEABLE
33472-1627	LT. GRAY	B	YES	X	X	X	X	X	X	X	X	X	X	X	X	X	X	X	X	SALEABLE
33472-1628	BROWN	C	YES	X	X	X	X	X	X	X	X	X	X	X	X	X	X	X	X	SALEABLE
33472-1629	GREEN	D	YES	X	X	X	X	X	X	X	X	X	X	X	X	X	X	X	X	SALEABLE
~~33472-1630~~			VOIDED																	
33472-1631	BLACK	A	-								X	X								SALEABLE
33472-1632	LT. GRAY	B	-								X	X								SALEABLE
33472-1633	BROWN	C	-								X	X								SALEABLE
33472-1634	GREEN	D	-								X	X								SALEABLE
~~33472-1635~~			VOIDED																	
33472-1636	BLACK	A	YES								X	X								SALEABLE
33472-1637	LT. GRAY	B	YES								X	X								SALEABLE
33472-1638	BROWN	C	YES								X	X								SALEABLE
33472-1639	GREEN	D	YES								X	X								SALEABLE
~~33472-1640~~			VOIDED																	
33472-1641	BLACK	A	-	X							X	X								SALEABLE
33472-1642	LT. GRAY	B	-	X							X	X								SALEABLE
33472-1643	BROWN	C	-	X							X	X								SALEABLE
33472-1644	GREEN	D	-	X							X	X								SALEABLE
~~33472-1645~~			VOIDED																	
33472-1646	BLACK	A	YES	X							X	X								SALEABLE
33472-1647	LT. GRAY	B	YES	X							X	X								SALEABLE
33472-1648	BROWN	C	YES	X							X	X								SALEABLE
33472-1649	GREEN	D	YES	X							X	X								SALEABLE
~~33472-1650~~			VOIDED																	
33472-1651	BLACK	A	-															X		SALEABLE
33472-1652	BLACK	A	YES															X		SALEABLE
33472-1653	BLACK	A	-	X							X	X							X	SALEABLE
33472-1654	LT. GRAY	B	-	X							X	X							X	SALEABLE
33472-1655	BROWN	C	-	X							X	X							X	SALEABLE
33472-1656	GREEN	D	-	X							X	X							X	SALEABLE
~~33472-1657~~			VOIDED																	
33472-1658	BLACK	A	YES	X							X	X							X	SALEABLE
33472-1659	LT. GRAY	B	YES	X							X	X							X	SALEABLE
33472-1660	BROWN	C	YES	X							X	X							X	SALEABLE
33472-1661	GREEN	D	YES	X							X	X							X	SALEABLE
~~33472-1662~~			VOIDED																	
33472-1663	BLACK	A	-	X			X		X	X	X	X			X	X	X			SALEABLE
33472-1664	BLACK	A	-			X	X	X		X		X	X	X	X	X	X	X	X	SALEABLE
33472-1665	BLACK	A	-							X	X	X			X	X	X			SALEABLE
33472-1666	BLACK	A	-			X	X	X					X	X	X	X	X	X	X	SALEABLE
33472-1667	BLACK	A	-			X	X	X				X	X	X	X	X	X	X	X	SALEABLE
33472-1668	BLACK	A	-	X				X												SALEABLE
33472-1669	LT. GRAY	B	-								X				X	X	X	X	X	SALEABLE

ENTER DESCRIPTION
EC NO: UAU2013-1999 2013/01/30
DRWN:TYE 2013/02/07
CHKD:
APPR:VKOSHY
DESCRIPTION
AS9
REV

QUALITY SYMBOLS
=0
=0
=0

GENERAL TOLERANCES (UNLESS SPECIFIED)

	mm	INCH
4 PLACES	± ---	± ---
3 PLACES	± ---	± ---
2 PLACES	± 0.10	± ---
1 PLACE	± 0.3	± ---
0 PLACE	±	±

ANGULAR ± 3 °
DRAFT WHERE APPLICABLE MUST REMAIN WITHIN DIMENSIONS

DIMENSION STYLE: MM ONLY
SCALE
DESIGN UNITS: METRIC
THIRD ANGLE PROJECTION

DRAWN BY: DGRIFFITHS DATE: 05-29-03
CHECKED BY: DGRIFFITHS DATE: 05-29-03
APPROVED BY: VKOSHY DATE: 2010/10/27

TITLE: MX150 2X8 RECEPTACLE SEALED ASSEMBLY MAT SEAL

molex

MATERIAL NO.: SEE BOM
DOCUMENT NO.: SD-33472-161
SHEET NO.: 4 OF 7
SIZE: D

THIS DRAWING CONTAINS INFORMATION THAT IS PROPRIETARY TO MOLEX INCORPORATED AND SHOULD NOT BE USED WITHOUT WRITTEN PERMISSION

ASSEMBLY PART NUMBER	COLOR	KEYING OPTION	CPA	CAVITY TYPE & STATUS (X = PLUGGED)																STATUS
				1	2	3	4	5	6	7	8	9	10	11	12	13	14	15	16	
33472-1670	LT. GRAY	B	-								X					X	X	X	X	SALEABLE
33472-1671	LT. GRAY	B	-										X	X						SALEABLE
33472-1672	LT. GRAY	B	-										X	X	X					SALEABLE
33472-1673	BLACK	A	YES										X	X		X	X	X	X	SALEABLE
33472-1674	LT. GRAY	B	-												X					SALEABLE
33472-1675	BLACK	A	YES										X	X				X	X	SALEABLE
33472-1676	BLACK	A	YES								X	X	X	X	X			X	X	SALEABLE
33472-1677	LT. GRAY	B	-				X		X	X	X				X		X			SALEABLE
33472-1678	BLACK	A	-					X												SALEABLE
33472-1679	BLACK	A	-					X											X	SALEABLE
33472-1680	BLACK	A	YES															X	X	SALEABLE
33472-1681	BLACK	A	-		X			X		X			X				X			SALEABLE
33472-1682	LT. GRAY	B	-				X													SALEABLE
33472-1683	BLACK	A	-																X	SALEABLE
33472-1684	BLACK	A	-				X								X					SALEABLE
33472-1685	LT. GRAY	B	-																X	SALEABLE
33472-1686	LT. GRAY	B	-				X								X		X			SALEABLE
33472-1687	LT. GRAY	B	-														X			SALEABLE
33472-1688	BLACK	A	-		X															SALEABLE
33472-1689	LT. GRAY	B	-		X		X								X		X			SALEABLE
33472-1690	LT. GRAY	B	-		X												X			SALEABLE
33472-1691	BLACK	A	-		X		X								X					SALEABLE
33472-1692	BLACK	A	-				X				X				X					SALEABLE
33472-1693	LT. GRAY	B	-				X				X				X		X			SALEABLE
33472-1694	LT. GRAY	B	-								X						X			SALEABLE
33472-1695	BLACK	A	-		X						X									SALEABLE
33472-1701	BLACK	A	-		X		X				X				X					SALEABLE
33472-1702	LT. GRAY	B	-		X		X				X				X		X			SALEABLE
33472-1703	LT. GRAY	B	-		X						X						X			SALEABLE
33472-1704	BLACK	A	-		X		X													SALEABLE
33472-1705	LT. GRAY	B	-		X		X										X			SALEABLE
33472-1706	BLACK	A	-		X				X				X			X	X	X	X	SALEABLE
33472-1707	BLACK	A	-		X				X				X	X		X	X	X	X	SALEABLE
33472-1708	BLACK	A	-		X				X				X			X	X			SALEABLE
33472-1709	BLACK	A	-				X				X									SALEABLE
33472-1710	BLACK	A	-		X				X					X						SALEABLE
33472-1711	BLACK	A	-		X				X											SALEABLE
33472-1712	BLACK	A	YES					X	X	X	X					X				SALEABLE
33472-1713	BLACK	A	YES					X	X	X	X			X	X	X	X			SALEABLE
33472-1714	BLACK	A	YES					X	X	X	X				X	X	X			SALEABLE
33472-1715	LT. GRAY	B	YES	X	X	X	X	X	X		X		X		X	X				SALEABLE
33472-1716	LT. GRAY	B	YES	X		X	X	X			X		X							SALEABLE
33472-1717	LT. GRAY	B	YES	X			X	X			X		X							SALEABLE
33472-1718	BLACK	A	YES					X	X	X	X			X		X				SALEABLE
33472-1719	BLACK	A	YES				X	X	X									X	X	SALEABLE
33472-1720	BLACK	A	YES			X	X	X	X									X	X	SALEABLE
33472-1721	BLACK	A	YES								X					X	X	X	X	SALEABLE
33472-1722	BLACK	A	YES	X	X	X	X	X	X		X					X		X	X	SALEABLE
33472-1723	BLACK	A	YES							X	X			X	X	X	X			SALEABLE
33472-1724	BLACK	A	YES							X	X				X	X	X			SALEABLE
33472-1725	BLACK	A	YES							X	X					X				SALEABLE
33472-1726	BLACK	A	YES							X	X			X		X				SALEABLE
33472-1727	BLACK	A	YES													X	X	X	X	SALEABLE
33472-1728	LT. GRAY	B	YES				X	X			X				X					SALEABLE
33472-1729	LT. GRAY	B	YES	X	X		X	X	X		X		X		X	X				SALEABLE
33472-1730	LT. GRAY	B	YES		X		X	X	X		X		X	X	X	X			X	SALEABLE
33472-1731	LT. GRAY	B	YES				X	X							X	X				SALEABLE
33472-1732	LT. GRAY	B	YES		X		X	X	X		X		X		X	X				SALEABLE
33472-1733	LT. GRAY	B	YES						X					X						SALEABLE
33472-1734	LT. GRAY	B	YES			X			X					X						SALEABLE
33472-1735	LT. GRAY	B	YES		X	X	X	X	X		X		X		X	X				SALEABLE
33472-1736	BLACK	A	-		X		X	X	X				X		X	X	X			SALEABLE
33472-1737	LT. GRAY	B	YES	X	X	X	X	X	X		X		X	X	X	X			X	SALEABLE
33472-1738	LT. GRAY	B	YES										X							SALEABLE
33472-1739	LT. GRAY	B	YES				X	X					X		X	X				SALEABLE
33472-1740	BLACK	A	YES					X								X				SALEABLE
33472-1741	BLACK	A	YES							X	X			X	X	X	X	X		SALEABLE
33472-1742	BLACK	A	YES							X	X				X	X	X	X		SALEABLE
33472-1743	BLACK	A	YES							X	X									SALEABLE
33472-1744	BLACK	A	YES											X						SALEABLE

BOM SHEET 2

ENTER DESCRIPTION EC NO: UAU2013-1999 2013/01/30 DRWN:TYE 2013/02/07 CHKD: APPR:VKOSHY AS9	DESCRIPTION REV	QUALITY SYMBOLS =0 =0 =0	GENERAL TOLERANCES (UNLESS SPECIFIED) mm / INCH 4 PLACES ± --- / ± --- 3 PLACES ± --- / ± --- 2 PLACES ± 0.10 / ± --- 1 PLACE ± 0.3 / ± --- 0 PLACE ± / ± ANGULAR ± 3 ° DRAFT WHERE APPLICABLE MUST REMAIN WITHIN DIMENSIONS	DIMENSION STYLE MM ONLY DRAWN BY DGRIFFITHS DATE 05-29-03 CHECKED BY DGRIFFITHS DATE 05-29-03 APPROVED BY VKOSHY DATE 2010/10/27 MATERIAL NO. SEE BOM	SCALE DESIGN UNITS METRIC THIRD ANGLE PROJECTION TITLE MX150 2X8 RECEPTACLE SEALED ASSEMBLY MAT SEAL molex DOCUMENT NO. SD-33472-161 SHEET NO. 5 OF 7	SIZE D	THIS DRAWING CONTAINS INFORMATION THAT IS PROPRIETARY TO MOLEX INCORPORATED AND SHOULD NOT BE USED WITHOUT WRITTEN PERMISSION

BOM SHEET 3

ASSEMBLY PART NUMBER	COLOR	KEYING OPTION	CPA	CAVITY TYPE & STATUS (X = PLUGGED)																STATUS
				1	2	3	4	5	6	7	8	9	10	11	12	13	14	15	16	
33472-1745	BLACK	A											X	X				X	X	SALEABLE
33472-1746	BLACK	A	-	X	X	X	X	X	X					X	X	X	X	X	X	SALEABLE
33472-1747	BLACK	A	-	X	X	X	X	X	X		X	X					X	X	X	SALEABLE
33472-1748	BLACK	A	-	X	X	X	X	X	X					X	X	X	X	X	X	SALEABLE
33472-1749	BLACK	A	-							X	X	X	X	X	X	X	X	X	X	SALEABLE
33472-1750	BLACK	A	-	X	X	X	X	X	X								X	X	X	SALEABLE
33472-1751	BLACK	A	-								X	X	X	X	X	X	X	X	X	SALEABLE
33472-1752	BLACK	A	-										X	X	X	X	X	X	X	SALEABLE
33472-1753	BLACK	A	-											X	X	X	X	X	X	SALEABLE
33472-1754	BLACK	A	-	X	X	X	X	X	X											SALEABLE
33472-1755	BLACK	A	-								X	X					X	X	X	SALEABLE
33472-1756	BLACK	A	-												X	X	X	X	X	SALEABLE
33472-1757	BLACK	A	-							X	X	X	X							SALEABLE
33472-1758	BLACK	A	-														X	X	X	SALEABLE
33472-1759	BLACK	A	-		X				X	X	X									SALEABLE
33472-1760	BLACK	A	-		X		X		X	X	X				X					SALEABLE
33472-1761	BLACK	A	-		X			X	X	X	X	X	X		X		X	X	X	SALEABLE
33472-1762	BLACK	A	-		X			X	X	X	X		X		X		X	X		SALEABLE
33472-1763	BLACK	A	-		X							X	X					X	X	SALEABLE
33472-1764	BLACK	A	-		X								X					X		SALEABLE
33472-1765	BLACK	A	-	X	X	X	X	X	X	X	X	X	X							SALEABLE
33472-1766	BLACK	A	-	X	X	X	X	X	X				X	X	X	X	X	X	X	SALEABLE
33472-1767	DK GARY	C	-																	TOOLED BUT NOT VALIDATED
33472-1768	ST GRAY	D	-																	TOOLED BUT NOT VALIDATED
33472-1769	DK GARY	C	YES																	TOOLED BUT NOT VALIDATED
33472-1770	ST GRAY	D	YES																	TOOLED BUT NOT VALIDATED
33472-1771	LT. GRAY	B	-	X	X	X	X	X	X	X	X	X	X		X		X	X	X	SALEABLE
33472-1772	LT. GRAY	B	-	X	X	X	X	X	X	X	X	X	X		X		X	X		SALEABLE
33472-1773	LT. GRAY	B	YES				X	X					X	X	X	X				SALEABLE
33472-1774	LT. GRAY	B	YES				X	X			X		X	X	X	X				SALEABLE
33472-1775	LT. GRAY	B	YES				X	X			X		X	X	X	X			X	SALEABLE
33472-1776	LT. GRAY	B	YES				X	X			X		X		X	X				SALEABLE
33472-1777	LT. GRAY	B	YES				X	X						X	X	X				SALEABLE
33472-1778	BLACK	A	-			X	X					X	X					X	X	SALEABLE
33472-1779	BLACK	A	-		X		X		X	X		X		X		X		X	X	SALEABLE
33472-1780	BLACK	A	YES														X	X	X	SALEABLE
33472-1781	BLACK	A	NO				X	X		X										SALEABLE
33472-1782	BLACK	A	YES												X	X	X	X	X	SALEABLE
33472-1783	BLACK	A	-	X	X	X	X			X	X	X	X	X	X			X	X	SALEABLE
33472-1784	BLACK	A	-	X	X	X	X				X	X	X	X	X				X	SALEABLE
33472-1785	BLACK	A	-		X	X	X					X	X					X	X	SALEABLE
33472-1786	BLACK	A	-		X	X	X	X	X	X	X	X	X		X		X	X	X	SALEABLE
33472-1787	BLACK	A	-					X			X		X	X		X		X		SALEABLE
33472-1788	BLACK	A	-			X		X			X		X	X		X		X		SALEABLE
33472-1789	BLACK	A	-					X			X		X	X			X			SALEABLE
33472-1790	BLACK	A	-			X	X	X			X		X	X	X	X	X	X		SALEABLE
33472-1791	BLACK	A	-			X	X					X	X					X	X	SALEABLE
33472-1792	BLACK	A	-	X		X		X		X	X		X	X			X	X		SALEABLE
33472-1793	BLACK	A	-													X	X	X	X	SALEABLE
33472-1794	BLACK	A	-		X		X		X	X	X				X					SALEABLE
33472-1795	BLACK	A	YES												X		X			SALEABLE
33472-1796	BLACK	A	NO	X				X		X	X		X	X			X	X		SALEABLE
33472-1797	BLACK	A	-					X			X		X	X						SALEABLE
33472-1798	BLACK	A	-	X		X		X		X				X				X		SALEABLE
33472-1799	LT. GRAY	B	YES		X		X				X				X		X			SALEABLE
33472-1800	BLACK	A	-	X		X		X												SALEABLE
33472-1801	LT. GRAY	B	YES				X	X			X				X	X				SALEABLE
33472-1802	LT. GRAY	B	YES		X		X	X	X		X				X	X				SALEABLE
33472-1803	LT. GRAY	B	YES		X		X	X	X		X		X		X	X				SALEABLE
33472-1804	LT. GRAY	B	YES		X	X	X	X	X		X				X	X				SALEABLE
33472-1805	BLACK	A	-									X					X	X	X	SALEABLE
33472-1806	BLACK	A	YES	X		X	X								X	X	X	X	X	SALEABLE
33472-1807	BLACK	A	YES	X	X	X	X	X			X			X	X	X	X	X	X	SALEABLE
33472-1808	BLACK	A	YES		X	X	X	X			X			X						SALEABLE
33472-1809	BLACK	A	YES			X	X													SALEABLE
33472-1810	BLACK	A	-	X	X	X	X	X	X	X	X					X	X	X	X	SALEABLE
33472-1811	BLACK	A	-	X	X	X										X	X	X		SALEABLE
33472-1812	BLACK	A	-	X	X											X	X	X		SALEABLE
33472-1813	LT.GRAY	B	-						X	X	X			X						SALEABLE
33472-1814	LT.GRAY	B	-						X	X	X			X			X			SALEABLE
33472-1815	LT.GRAY	B	-						X			X		X	X	X		X	X	SALEABLE
33472-1816	LT.GRAY	B	-						X			X	X	X	X	X	X	X	X	SALEABLE
33472-1817	LT.GRAY	B	-	X	X	X	X	X	X			X	X	X	X	X	X	X	X	SALEABLE
33472-1818	BLACK	A	-									X	X	X	X	X	X	X	X	SALEABLE
33472-1819	BLACK	A	YES				X	X	X	X	X	X	X	X	X	X	X	X	X	SALEABLE
33472-1820	BLACK	A	YES								X	X			X	X	X	X	X	SALEABLE
33472-1821	LT.GRAY	B	YES				X	X		X					X	X				SALEABLE
33472-1822	LT.GRAY	B	YES				X	X		X			X		X	X				SALEABLE
33472-1823	LT.GRAY	B	YES				X	X		X	X		X		X	X				SALEABLE
33472-1824	LT.GRAY	B	YES				X	X		X	X	X	X		X	X				SALEABLE
33472-1825	LT.GRAY	B	YES		X		X	X	X	X	X	X	X		X	X				SALEABLE

ENTER DESCRIPTION
EC NO: UAU2013-1999 2013/01/30
DRWN:TYE
CHKD:
APPR:WKOSHY 2013/02/07
DESCRIPTION
REV
AS9

QUALITY SYMBOLS
=0
=0
=0

GENERAL TOLERANCES (UNLESS SPECIFIED)

	mm	INCH
4 PLACES	± ---	± ---
3 PLACES	± ---	± ---
2 PLACES	± 0.10	± ---
1 PLACE	± 0.3	± ---
0 PLACE	±	±

ANGULAR ± 3 °

DRAFT WHERE APPLICABLE MUST REMAIN WITHIN DIMENSIONS

DIMENSION STYLE: MM ONLY
SCALE
DESIGN UNITS: METRIC
THIRD ANGLE PROJECTION

DRAWN BY: DGRIFFITHS DATE: 05-29-03
CHECKED BY: DGRIFFITHS DATE: 05-29-03
APPROVED BY: VKOSHY DATE: 2010/10/27

TITLE: MX150 2X8 RECEPTACLE SEALED ASSEMBLY MAT SEAL

molex

MATERIAL NO.: SEE BOM
DOCUMENT NO.: SD-33472-161
SHEET NO.: 6 OF 7
SIZE: D

THIS DRAWING CONTAINS INFORMATION THAT IS PROPRIETARY TO MOLEX INCORPORATED AND SHOULD NOT BE USED WITHOUT WRITTEN PERMISSION

	ASSEMBLY PART NUMBER	COLOR	KEYING OPTION	CPA	CAVITY TYPE & STATUS (X = PLUGGED)																STATUS
					1	2	3	4	5	6	7	8	9	10	11	12	13	14	15	16	
AS9	33472-1826	BLACK	A	-	X	X	X	X	X	X			X				X	X	X	X	SALEABLE
AS9	33472-1827	BLACK	A	-	X	X	X	X	X	X			X	X	X	X	X	X	X	X	SALEABLE
AS9	33472-1828	BLACK	A	-						X				X	X	X	X	X			SALEABLE
AS9	33472-1829	BLACK	A	-	X	X	X	X	X	X				X	X	X	X	X			SALEABLE
AS9	33472-1830	BLACK	A	-	X	X	X	X	X	X							X	X			SALEABLE
AS9	33472-1831	BLACK	A	-						X			X	X	X	X	X	X	X	X	SALEABLE

ENTER DESCRIPTION
EC NO: UAU2013-1999 2013/01/30
DRWN: TYE
CHKD:
APPR: VKOSHY 2013/02/07
DESCRIPTION
REV
AS9

QUALITY SYMBOLS
=0
=0
=0

GENERAL TOLERANCES (UNLESS SPECIFIED)

	mm	INCH
4 PLACES	± ---	± ---
3 PLACES	± ---	± ---
2 PLACES	± 0.10	± ---
1 PLACE	± 0.3	± ---
0 PLACE	±	±
ANGULAR ± 3 °		

DRAFT WHERE APPLICABLE MUST REMAIN WITHIN DIMENSIONS

DIMENSION STYLE: MM ONLY
SCALE: 2:1
DESIGN UNITS: METRIC
THIRD ANGLE PROJECTION

DRAWN BY: DGRIFFITHS DATE: 05-29-03
CHECKED BY: DGRIFFITHS DATE: 05-29-03
APPROVED BY: VKOSHY DATE: 2010/10/27
MATERIAL NO.: SEE BOM

TITLE: MX150 2X8 RECEPTACLE SEALED ASSEMBLY MAT SEAL

molex

DOCUMENT NO.: SD-33472-161
SHEET NO.: 7 OF 7

SIZE: D

THIS DRAWING CONTAINS INFORMATION THAT IS PROPRIETARY TO MOLEX INCORPORATED AND SHOULD NOT BE USED WITHOUT WRITTEN PERMISSION