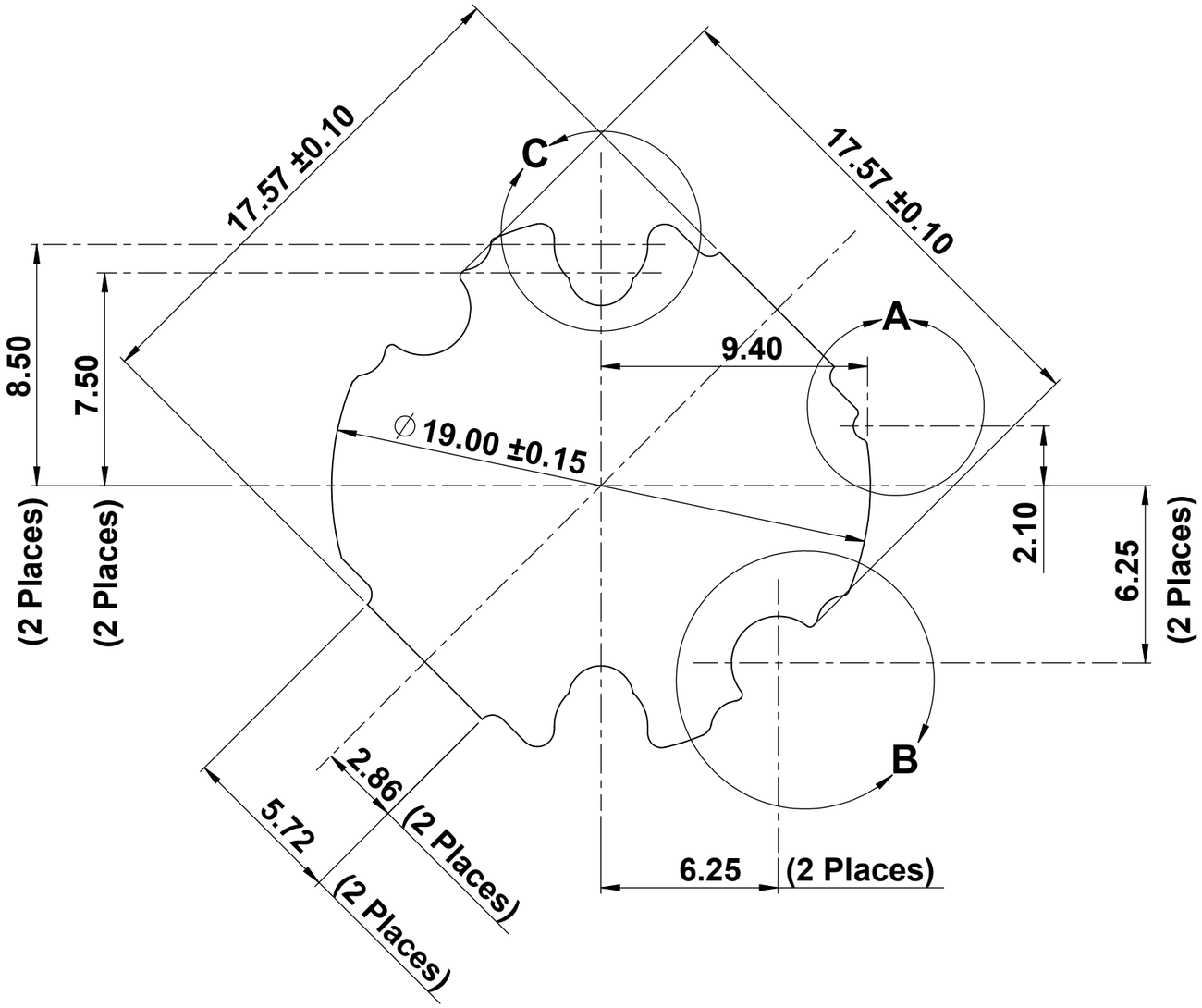


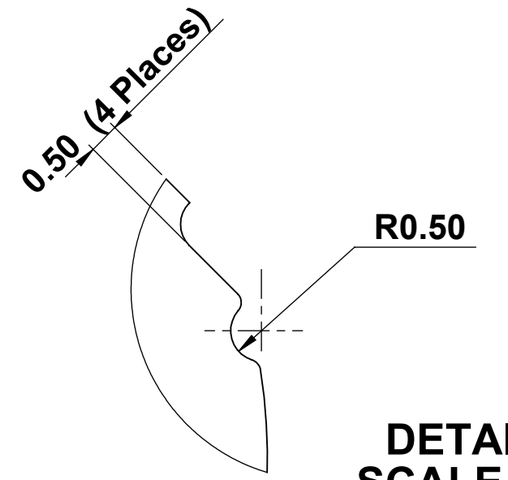


**DETAIL A**
**SCALE 10 : 1**

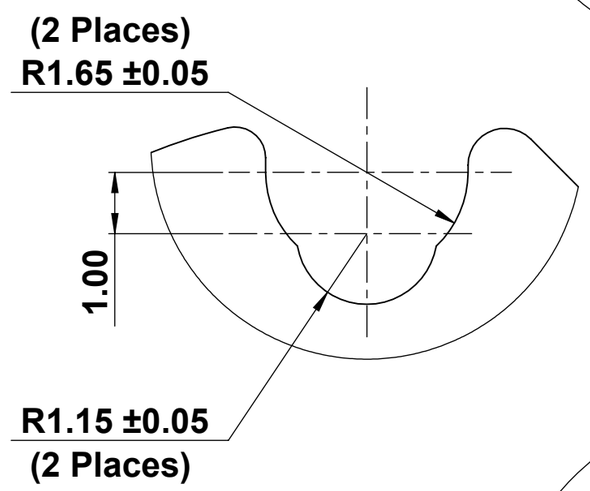


**DETAIL C**
**SCALE 10 : 1**

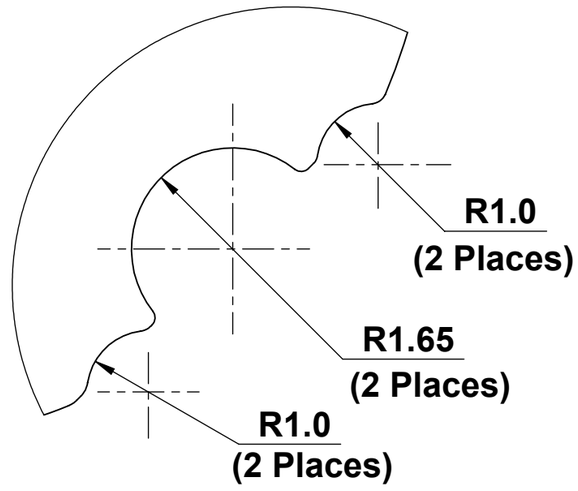


**DETAIL B**
**SCALE 10 : 1**

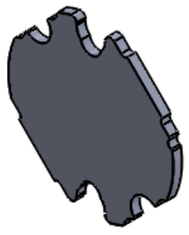

**3D View**
**Scale:- 2:1**

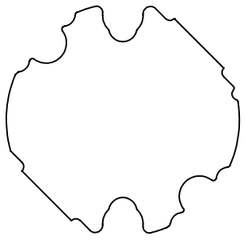

**REFERENCE VIEW**
**Scale:- 2:1**

| | | | | |
|---|---|---|---|---|
| UNLESS OTHERWISE SPECIFIED:<br>DIMENSIONS ARE IN MILLIMETERS<br>SURFACE FINISH:<br>TOLERANCES:<br>LINEAR:<br>ANGULAR: | t-Global Technology | | DO NOT SCALE DRAWING | REVISION |
| | | | LP0003/01-Material Ref.-Thickness(T mm.) | |
| | | | Ordering No. LP0003/01-H48-6G-0.3-2A | |
| | NAME | DATE | Material | TITLE: |
| DRAWN | L. Simpson | 16th July 2012 | t-Global Thermal Material H48-6G<br>Thickness T = 0.3mm. | LUMI - PAD<br>for LED Configuration |
| CHK'D | | | | |
| APPV'D | | | | |
| MFG | | | | |
| Used On:-<br>LUXEON LXK8-PWxx-0004 | | | DWG NO.<br>LP0003/01-H48-6G-0.3-2A | A3 |
| | | | WEIGHT: | SCALE: 5:1 / SHEET 1 OF 1 |