NEWAVA	TITLE 1.544 mHz T1, TRANSFORMER	PN S10951	REV B
	AGENCY APPROVAL: NA	SH 1 OF 1	

SPECIFICATIONS:

1. LONGITUDINAL BALANCE: 40 db MIN @ 4 kHz
   (2-6) OR (3-5)
   WITH 1 AND 4 GROUNDED
   100 OHMS - 100 OHMS

2. INDUCTANCE: 6-2 = 3.78 - 8.44 mHy
   @ 0.1 Vrms, 10.0 kHz

3. HI-POT: 1000 Vdc MIN WINDING TO WINDING
   WINDING TO CORE

4. TURNS RATIO: (6-2) : (3-5) = 1 CT : 1 CT ± 1 %

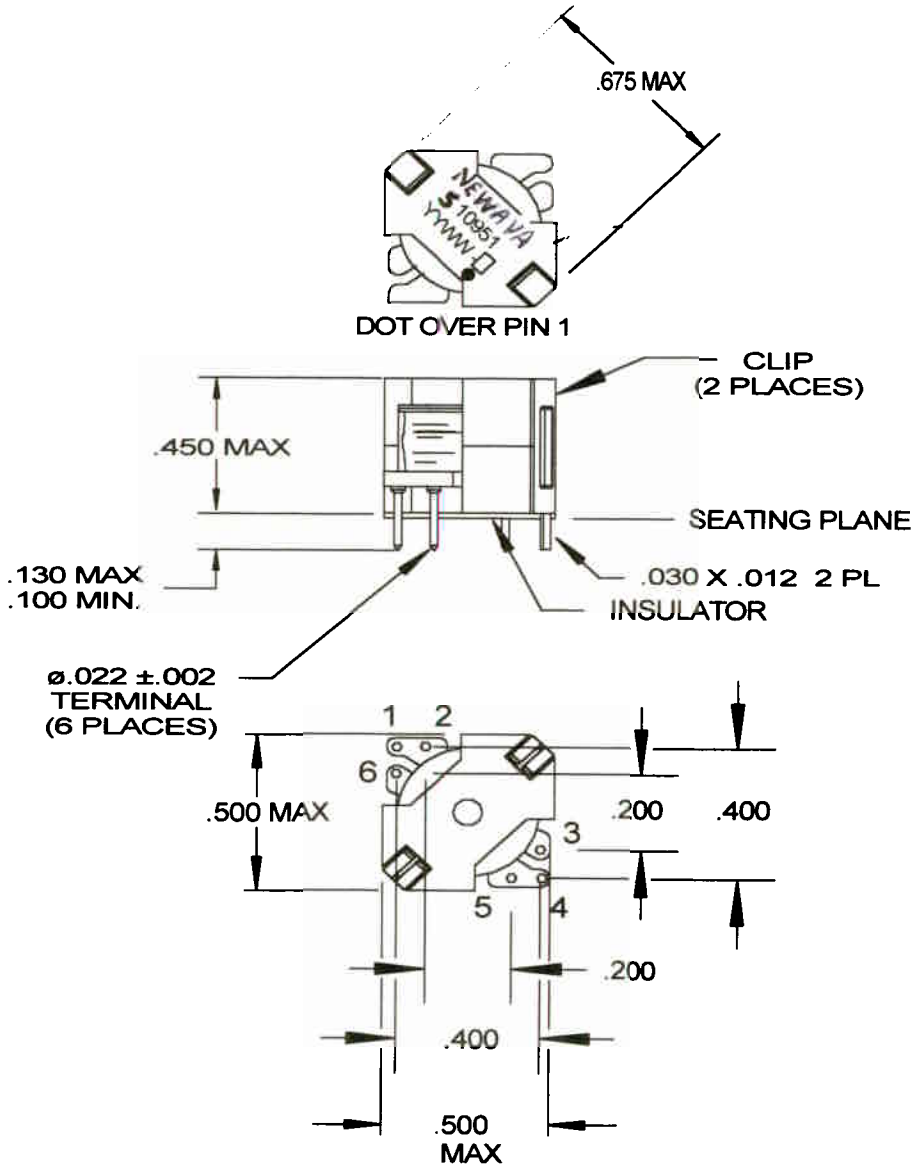

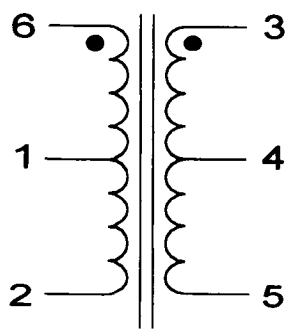

NOTE: PIN 1 DOT MUST BE A DOT, NOT AN ASTERICK!

TOLERANCES UNLESS OTHERWISE SPECIFIED	INCHES / DECIMAL	.XX = ± .01	.XXX = ± .005	ANGLES ± 1°
	MILLIMETERS (mm)	.XX = ± 0.20		