Binding Post - Insulated Standard

INCHES (MILLIMETERS)
CUSTOMER DRAWINGS AVAILABLE UPON REQUEST

SPECIFICATIONS
Stud: Brass per QQ-B-626D
Finish: Silver
Insulating Material: Nylon 6/6 per ASTM D4066
Hardware: Nickel plated nut (unassembled)
Body Thread Stripping Torque: 6.0 lb. in. (7.0 kg cm)
Panel Thickness: Up to .281 (7.15)

RATINGS
Current: 15 amps
Contact Resistance: 0.010 ohms maximum
Breakdown Voltage: 5700 Vrms minimum
Stud-to-Panel: 3.3 pF nominal

SILVER PLATING	
11-0102-001	Red

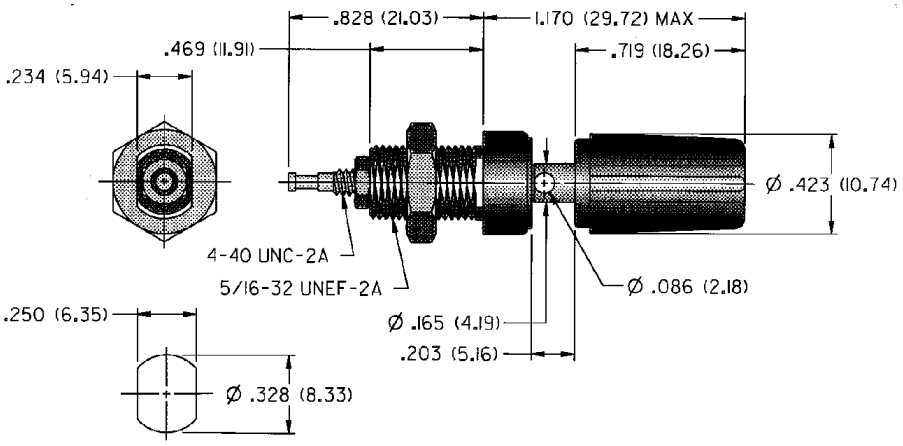

For Standard Banana Plug: .175 (4.44) Dia.
FEATURES:
- Turret terminal
- Captive thumb nut
- Insulated body is flatted to prevent turning
- Nylon UL approved for self-extinguishing