Apr.1.2017 Copyright 2017 HIROSE ELECTRIC CO., LTD. All Rights Reserved.

	COUNT	DESCRIPTION OF REVISIONS	BY	CHKD	DATE		COUNT	DESCRIPTION OF REVISIONS	BY	CHKD	DATE
△					. .	△					. .
△					. .	△					. .
△					. .	△					. .

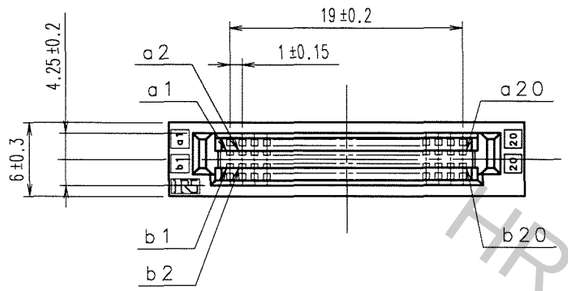

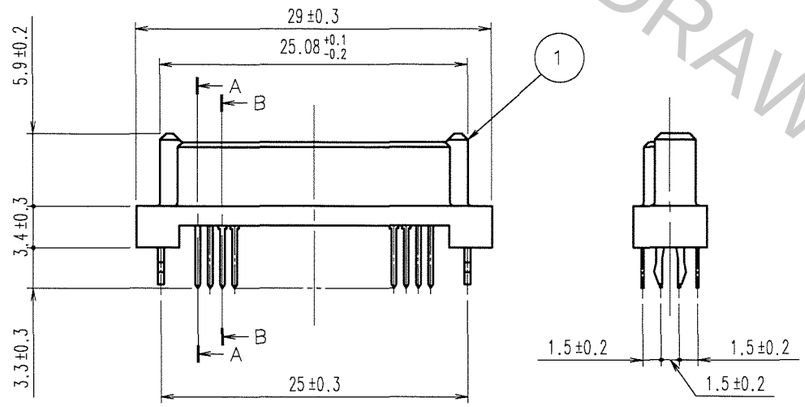

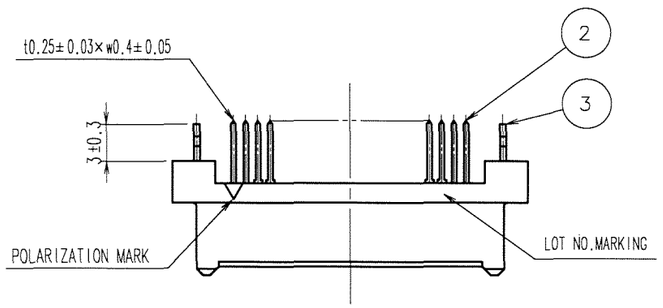

RECOMMENDED PC BOARD HOLE PATTERN (MOUNTING SIDE)

APPLICABLE BOARD THICKNESS,1.6

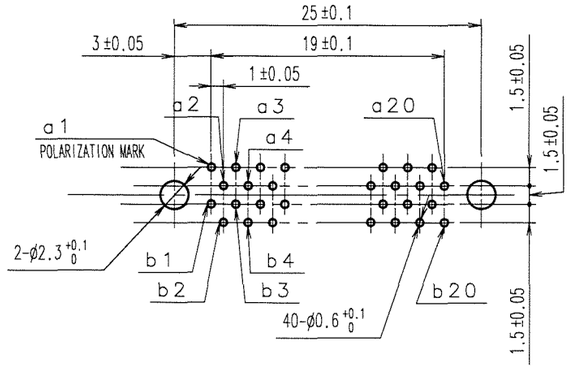

CONTACT SEQUENCE

SEQUENCE	PIN NO.
1	a1, a2, a19, a20 b1, b2, b19, b20
2	a3~a18 b3~b18

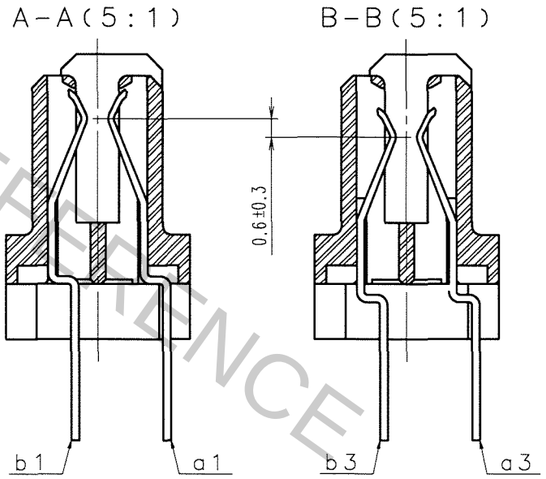

NO.	MATERIAL	FINISH, REMARKS
3	PHOSPHOR BRONZE	TIN-PLATING
1	POLYAMIDE	BEIGE UL94V-0

NO.	MATERIAL	FINISH, REMARKS
2	PHOSPHOR BRONZE	CONTACT AREA : GOLD 0.1μm min. LEAD AREA : TIN-PLATING 1.2μm min. UNDER PLATING : NICKEL 1μm min.

CODE NO.(OLD)	DRAWN	DESIGNED	CHECKED	APPROVED	RELEASED
CL	A.SUZUKAWA '06.10.06	M.Nakamura '06.10.06	K.Ozawa '06.10.06	H.Okawa 06.10.06	. .

SCALE 2 : 1

UNITS mm

DRAWING NO. EDC3-151519-21

HRS HIROSE ELECTRIC CO., LTD

PART NO. FX5-40S2A-DSAL(71)

CODE NO. CL575-0125-0-71

1/1

FORM NO.229

TO

HRS DRAWING FOR REFERENCE