DRAWING MADE IN THIRD ANGLE PROJECTION

/home/ampl6926/edmmod

PART NUMBER	REV	FIRST USED
1385255-1	B	122500-1
1385255-2	B	565435-5
1385255-3	B	354500-1

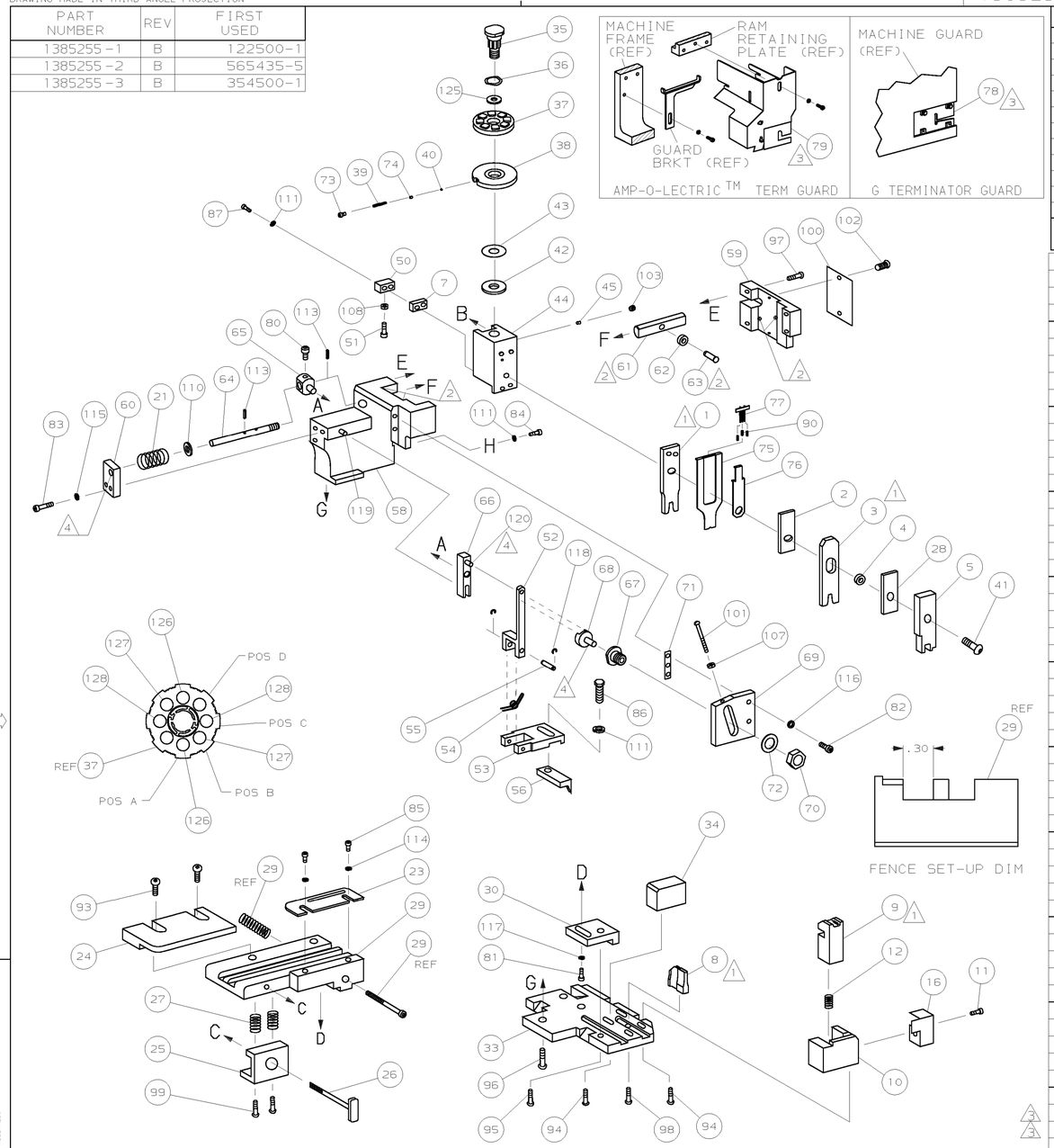

TERMINAL NAME: RECEPTACLE

342414

AMP TERMINAL	AMP CRIMP SPECS		
PAD LTR	CRIMP HEIGHT		WIRE SIZE
A	.103 ±.002 [2.62 ±0.05mm]		4.50mm²
B	.097 ±.002 [2.46 ±0.05mm]		4.00mm²
C	.087 ±.002 [2.21 ±0.05mm]		3.00mm²
D	NOT		USED
CRIMP	SIZE	TYPE	RANGE
WIRE	.120 [3.05mm]	F	3.00-4.50mm²
INSUL	.240 [6.10mm]	F	2.95-3.80mm

WIRE STRIP LENGTH	TERM APPL SPEC	FEED	APPL INSTRUCTION	SET UP GAGE	LAYOUT
–	–	.664	408-8040	458637-1	L2524

-3	-2	-1	U/M	DWG SIZE	PART NO	DESCRIPTION	ITEM NO
							129
2	2	2	–	C	6-354778-7	PIN, WIRE DISC (.2830)C	128
2	2	2	–	C	4-354778-6	PIN, WIRE DISC (.2725)B	127
2	2	2	–	C	3-354778-4	PIN, WIRE DISC (.2665)A	126
1	1	1	–	A	986950-1	WASHER, FLAT PRECISION	125
1	1	1	–	A	217238-1	GENERAL INSTRUCTION PACKAGE	124
1	1	1	–	–	4088040	SF APPL INST 408-8040	123
							122
							121
REF	REF	REF	–	A	1-21030-1	PIN,DOWEL(ø.187×.50)LEVER	120
REF	REF	REF	–	A	1-21030-6	PIN,DOWEL(ø.187×1.25)HOUSING	119
REF	REF	REF	–	A	21045-3	RING,RET "C"(ø.187)FD FING PIN	118
1	1	1	–	A	21024-5	WASHER, LOCK(#10)ADJ BLOCK	117
REF	REF	REF	–	A	21024-5	WASHER,LOCK(#10)ADJ PLATE	116
REF	REF	REF	–	A	21024-5	WASHER,LOCK(#10)FEED GDE ROD	115
2	2	2	–	A	21024-2	WASHER,LOCK(#4)FRONT STP GUIDE	114
REF	REF	REF	–	A	5-21028-1	PIN,SLT SPR(ø.125×.50)ADJ ROD	113
							112
4	4	4	–	A	21024-4	WASHER,LOCK(#8)STRIPPER	111
REF	REF	REF	–	A	21899-4	WASHER,FLAT(ø5/16)SCREW ADJ	110
							109
1	1	1	–	A	21018-5	NUT,HEX(NO.6)HOLDDOWN	108
REF	REF	REF	–	A	21068-5	NUT,HEX(6-32)FEED ADJ	107
							106
							105
1	1	–	–	A	992031-1	PIN, CLEVIS	104
1	1	1	–	A	21009-2	SCR,SKT SET(1/4-20×.25 LW)RAM	103
2	2	2	–	A	21017-2	SCR,DRIVE(#2×.19)ID PLATE	102
REF	REF	REF	–	A	6-23715-5	SCR,PAN HD(6-32×1.50)FEED ADJ	101
1	1	1	–	B	461264-1	PLATE, IDENTIFICATION	100
2	2	2	–	A	3-21002-0	SCR,BHC(10-32×.88)DRAG	99
1	1	1	–	A	22733-8	SCR,BHC(8-32×.38 LW)ANVIL	98
REF	REF	REF	–	A	2-21002-9	SCR,BHC(10-32×.75)CAP	97
REF	REF	REF	–	A	2-22733-8	SCR,BHC(1/4-20×.62)HOUSING	96
REF	REF	REF	–	A	2-21002-7	SCR,BHC(10-32×.50)SG ADJ BLOCK	95
4	4	4	–	A	2-21002-2	SCR,BHC(8-32×.50)TERM H DWN	94
2	2	2	–	A	2-21002-3	SCR,BHC(8-32×.75)R STP GDE	93
							92
1	1	1	–	A	1-21002-7	SCR,BHC(6-32×.38)CAM	91
3	3	3	–	A	2-32147-3	SPRING, DEPRESSOR	90
1	1	–	–	A	7-21000-9	SCR,SHC(4-40×.19)STRIPPER	89
							88
2	2	2	–	A	2-21000-9	SCR,SHC(8-32×.62)DEP-HOLD	87
1	1	1	–	A	2-22603-0	SCR,HEX HD(8-32×.31)FEED FINGER	86
2	2	2	–	A	1-21000-3	SCR,SHC(4-40×.25)F ST GUIDE	85
1	1	1	–	A	2-21000-7	SCR,SHC(8-32×.50)STRIPPER	84
REF	REF	REF	–	A	3-21000-7	SCR,SHC(10-32×.75)FEED ROD GD	83
REF	REF	REF	–	A	3-21000-6	SCR,SHC(10-32×.62)FD ADJ BLK	82
1	1	1	–	A	3-21000-4	SCR,SHC(10-32×.38)SG ADJ BL	81
REF	REF	REF	–	A	3-21000-4	SCR,SHC(10-32×.38)PIVOT BLK	80
–	REF	–	–	B	455749-1	GUARD, WINDOW	79
REF	–	–	–	B	679532-1	INSERT, GUARD	78
1	1	1	–	–	1424350-1	HOLDER,PIN	77
1	1	1	–	A2	1490524-2	SPACER, DEPRESSOR	76
1	1	1	–	A1	1490525-1	DEPRESSOR	75
1	1	1	–	A	690603-1	SPRING, ASSIST	74
1	1	1	–	A	23030-1	SCR,SHC(6-32×.25 SL)INS DISC	73
REF	REF	REF	–	A	458109-1	WASHER, SPECIAL	72
REF	REF	REF	–	A	690517-1	SPACER	71
-3	-2	-1	U/M	DWG SIZE	PART NO	DESCRIPTION	ITEM NO

QTY REQD PER ASSY — PARTS LIST

-1	LEADMAKER	MECH POST FEED
-2	BENCH MODEL K	MECH PRE FEED
-3	BENCH MODEL G	MECH PRE FEED

-3	-2	-1	U/M	DWG SIZE	PART NO	DESCRIPTION	ITEM NO
REF	REF	REF	–	B	22594-8	NUT,HEX(1/2-20)	70
REF	REF	REF	–	B	240628-1	PLATE, ADJUSTMENT	69
REF	REF	REF	–	B	240626-1	SHAFT, PIVOT	68
REF	REF	REF	–	B	240633-1	BUSHING	67
REF	REF	REF	–	A	455680-1	LEVER, INTERMEDIATE	66
REF	REF	REF	–	B	240629-1	BLOCK, PIVOT	65
REF	REF	REF	–	A	240632-2	SCREW, ADJ FEED ROD	64
REF	REF	REF	–	B	240659-3	PIN, CAM ROLLER	63
REF	REF	REF	–	B	240658-1	ROLLER, CAM	62
REF	REF	REF	–	B	454398-2	ROD, FEED	61
REF	REF	REF	–	A	454178-1	GUIDE, FEED ROD	60
REF	REF	REF	–	C	454220-1	CAP, RAM	59
REF	REF	REF	–	D	454485-1	HOUSING	58
							57
1	1	1	–	B	458537-2	PAWL, FEED	56
REF	REF	REF	–	B	240624-1	PIN, FEED FINGER	55
REF	REF	REF	–	B	691499-1	SPRING, FEED FINGER	54
REF	REF	REF	–	B	690541-1	HOLDER, FEED FINGER	53
REF	REF	REF	–	A	455679-2	LEVER, TERMINAL FEED ARM	52
1	1	1	–	A	811242-2	BUMPER, HOLDDOWN	51
1	1	1	–	A	690753-1	SPACER, TONKER	50
1	–	–	–	B	690602-6	CAM, PRE-FEED 1 5/8 ST	49
–	1	–	–	B	690602-5	CAM, PRE-FEED 1 1/8 ST	48
–	–	1	–	B	690501-4	CAM, POST-FEED 1 5/8 ST	47
1	1	1	–	B	459456-2	APPLICATOR, BASIC (SUBASSY)	46
1	1	1	–	A	690191-1	PLUG, NYLON	45
1	1	1	–	C	455673-1	RAM	44
1	1	1	–	A	690125-1	WASHER, LAMINATED	43
1	1	1	–	A	690124-1	WASHER, RAM	42
1	1	1	–	A	7-21002-9	BOLT, CRIMPER(5/16×1.00)	41
1	1	1	–	A	23241-6	BALL, STEEL	40
1	1	1	–	A	690170-1	SPRING, COMPRESSION	39
1	1	1	–	C	1-690142-0	DISC, INSULATION	38
1	1	1	–	D	354777-1	WIRE DISC, PLASTIC	37
1	1	1	–	A	22480-5	WASHER, SPRING	36
1	1	1	–	B	690212-1	POST, RAM	35
1	1	1	–	B	1-690786-4	SUPPORT, TERMINAL	34
REF	REF	REF	–	D	455675-1	PLATE, BASE	33
							32
							31
REF	REF	REF	–	B	455689-1	BLOCK, STRIP GUIDE ADJ	30
1	1	1	–	C	318042-1	STRIP GUIDE PLATE ASSY	29
1	1	1	–	C	1-455888-0	SPACER, FRONT SHEAR DEP	28
2	2	2	–	A	1-22284-0	SPRING, DRAG	27
1	1	1	–	B	690546-1	LEVER, DRAG RELEASE	26
1	1	1	–	B	240792-1	DRAG, TERMINAL	25
1	1	1	–	D	6-690504-9	GUIDE, STRIP (REAR)	24
1	1	1	–	A	690438-1	GUIDE, STRIP (FRONT)	23
–	–	1	–	B	690472-2	STRIPPER	22
REF	REF	REF	–	A	4-22284-9	SPRING, FEED RETURN	21
1	1	–	–	A	679218-1	STRIPPER WIRE STOP ASSY	20
1	1	–	–	B	458949-1	STRIPPER	19
							18
							17
1	1	1	–	B	318563-1	GUARD, CHIP, FRONT	16
							15
							14
							13
1	1	1	–	A	5-22280-0	SPRING, SHEAR	12
1	1	1	–	B	690461-2	STOP, SHEAR	11
1	1	1	–	C	1-690459-0	HOLDER, SHEAR (FRONT)	10
1	1	1	–	C	454276-5	SHEAR, FLOAT (FRONT)	9
1	1	1	–	C	1-662190-2	ANVIL	8
1	1	1	–	C	2-240641-9	SPACER, DEPRESSOR (REAR)	7
							6
1	1	1	–	C	1-455888-7	DEPRESSOR, SHEAR (FRONT)	5
1	1	1	–	B	238011-6	SPACER, BLOCK CRIMPER	4
1	1	1	–	C	4-1213077-8	CRIMPER, INSULATION	3
1	1	1	–	C	455888-7	SPACER, CRIMPER	2
1	1	1	–	C	1-456409-0	CRIMPER, WIRE	1
-3	-2	-1	U/M	DWG SIZE	PART NO	DESCRIPTION	ITEM NO

REVISION OF EACH ASSY NO (WHEN BLANK, USE DWG REVISION)

QTY REQD PER ASSY — PARTS LIST

1. RECOMMENDED SPARE PARTS.
2. GREASE LIGHTLY.
3. GUARD MUST BE IN PLACE WHEN OPERATING APPLICATOR IN A BENCH MACHINE.
4. LUBRICATE DAILY USING NO. 20 MACHINE OIL.
5. ITEMS WITH QTY OF REF SPECIFIED (EXCEPT ITEMS 78 AND 79) ARE USED ON ITEM 46.

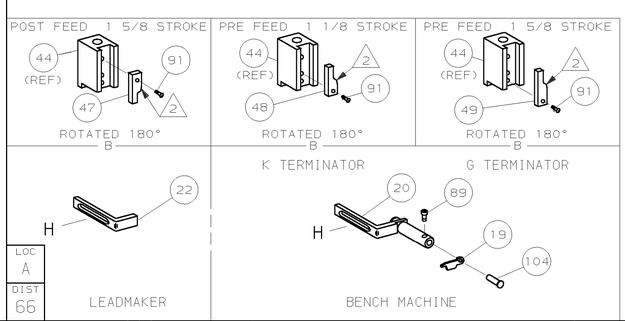

P	F	LTR	REVISION RECORD	APP	DATE
		B	ECN 0150-0766-01	TE	8-01
		A	PRODUCT RELEASE	CMR	APR10 01

DIMENSIONS IN INCHES. DO NOT SCALE PRINT. TOLERANCES UNLESS OTHERWISE SPECIFIED: 2 PLC DEC ±.02 3 PLC DEC ±- 4 PLC DEC ±- ANGLES ±- SURF TEXTURE, REMOVE BURRS, BREAK SHARP EDGES R.015 MAX

MATL – HT TR – FIN –

DR 02APR01 C.REICHELDERFER APP 02APR01 T.ELBIN CHK – REL –

AMP Incorporated Harrisburg, PA 17105-3608

NAME SIDE FEED HDM APPLICATOR MACHINE REF MINI APPL

SCALE – D DWG NO 1385255 SHEET 1 OF 1 REV B

CAGE CODE 00779 CUSTOMER AND ASSEMBLY DRAWING RESTRICTED TO –

THIS DRAWING IS A CONTROLLED DOCUMENT.
THIS DRAWING IS UNPUBLISHED. © COPYRIGHT 2001
RELEASED FOR PUBLICATION .2001
BY AMP INCORPORATED. ALL RIGHTS RESERVED.

LOC A DIST 66

AMP 1756 REV 3-92 08-AUG-01 08:02:55 amp16926