REV.	DESCRIPTION	DATE
A	NEW DRAWING	5/17/2006

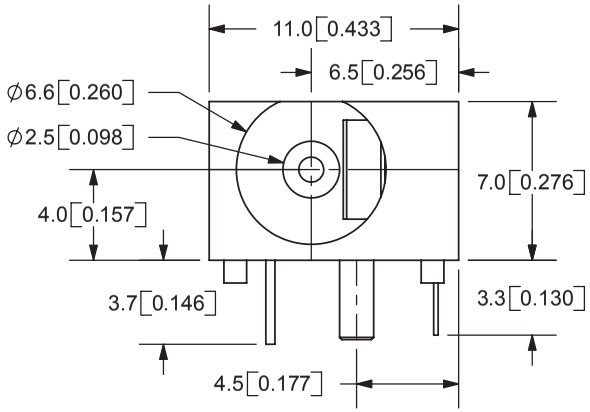

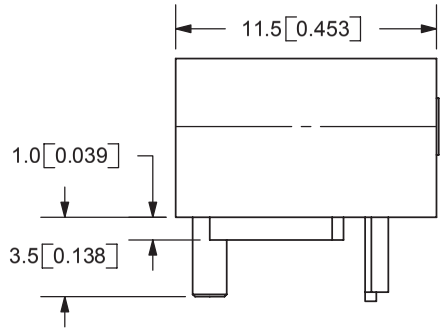

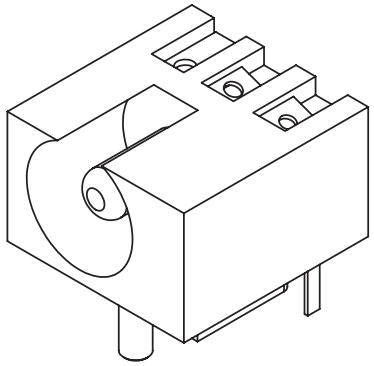

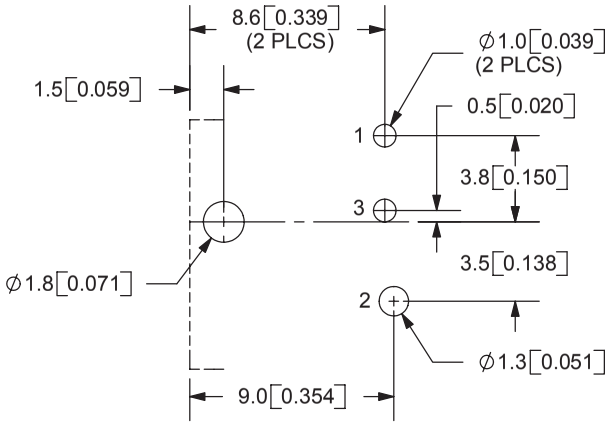

PCB LAYOUT
TOP VIEW

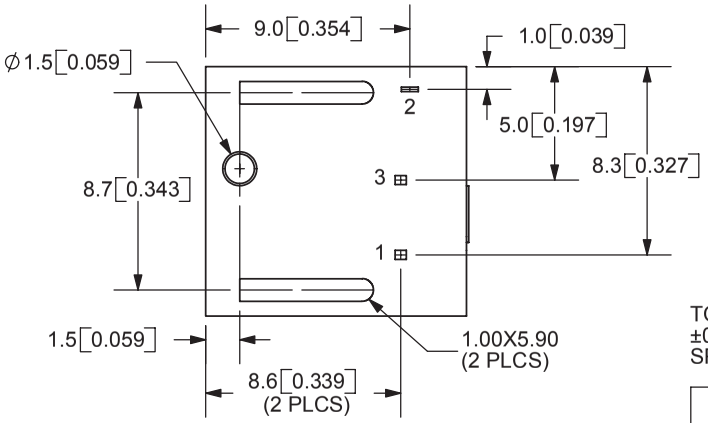

TOLERANCE:
±0.3mm UNLESS OTHERWISE SPECIFIED

RoHS

MODEL NO.	PJ-012B
SCHEMATIC	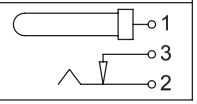

CENTER PIN DIAMETER 2.5mm

SPECIFICATIONS:
RATING: 16V DC @ 2A
CONTACT RESISTANCE: 30m OHMS MAX
INSULATION RESISTANCE: 100M OHMS MIN: 500V DC
VOLTAGE WITHSTAND: 500V AC R.M.S. FOR 1 MINUTE
LIFE: 5,000 CYCLES
OPERATING TEMP: -20° ~ +85°C

	MATERIAL	PLATING
CENTER PIN	Copper	Nickel
TERMINAL 1	Brass	Silver
TERMINAL 2	Titanium Copper Alloy	Silver
TERMINAL 3	Brass	Silver
HOUSING	PBT	

CUI INC
9615 SW Allen Blvd., Ste. 103
Beaverton, OR 97005
Phone: 503-643-4899
800-275-4899
Fax: 503-372-1266
Website: www.cui.com

TITLE: DC POWER JACK		REV: A
PART NO. PJ-012B	UNITS: MM [INCHES]	
DRAWN BY: ZRJ	APPROVED BY:	SCALE: 3:1

PC FILE NAME: PJ-012B

COPYRIGHT 2006 BY CUI INC.

For more information, please visit the product page | For information on related products, view External Power Supplies