Alle Rechte vorbehalten/ *All rights reserved*

Mating face according to : MIL-C- / DIN 652 / CECC 75301-802

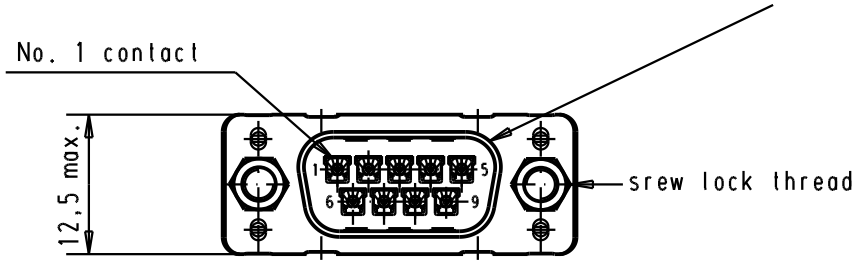

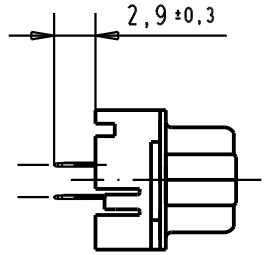

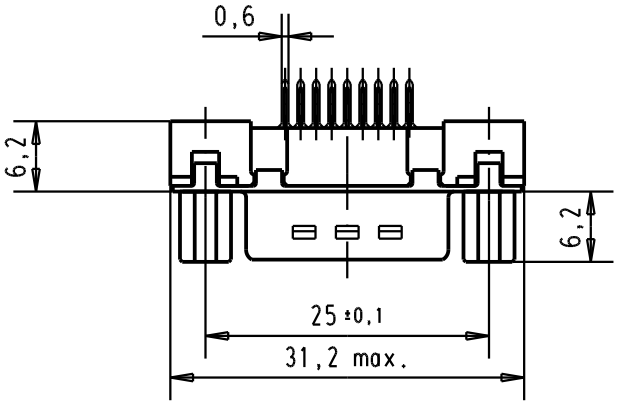

Printed board layout
component side

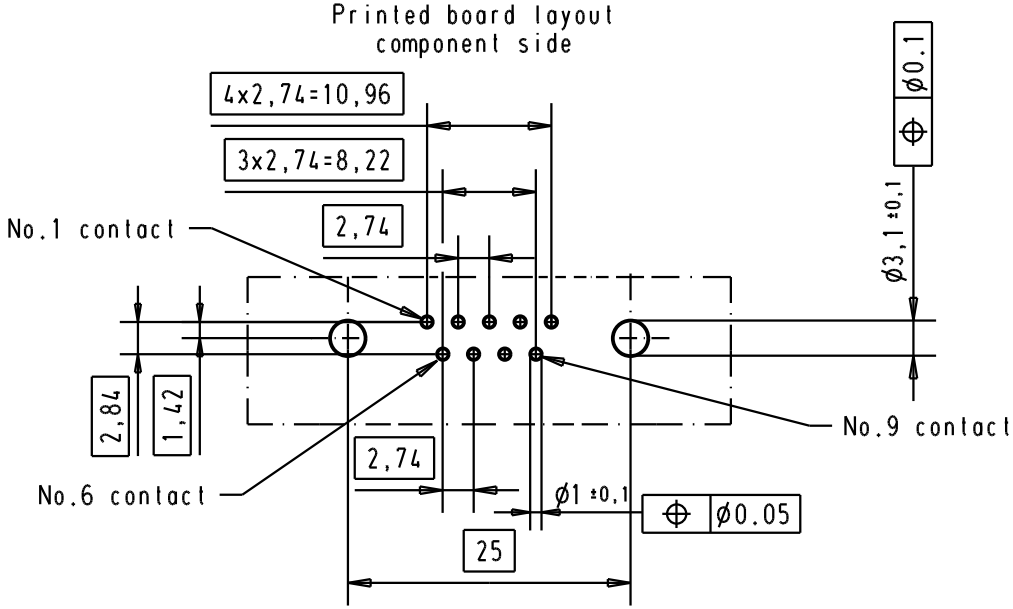

09 65 129 3703	4-40 UNC	1			
09 65 129 6703	4-40 UNC	2	31892	22/04/04	JH
09 65 129 7703	4-40 UNC	3	29723	05-MAR-02	CV
Part number	Screw lock thread	Performance level	Mod.	Dat.	Name

	Dat.	Name
Detail.	05-MAR-02	CV
Insp.		
Stand.		

All Dim. in mm
Orig. Size DIN A 4

D-Sub, Hight temperature, 9 poles, male, straight, with solder pins 2,9 and screw lock.

Maßstab/ *Scale* 1,5:1

HARTING EURL
F-95972 Paris

TB 09 65 129 X70x

Sub.

Blatt/ *Page* 3