ITEM	PART NAME	QUANTITY
1	CARTON	1 CARTON=50 UNITS
2	PALLET	1 PALLET=6 LAYERS 36 CARTONS 1800 UNITS
3	POLYESTER FILM	2 LAYERS MIN.
4	40 FT CONTAINER 20 FT CONTAINER	1 CONTAINER=40 PALLETS 1 CONTAINER=20 PALLETS

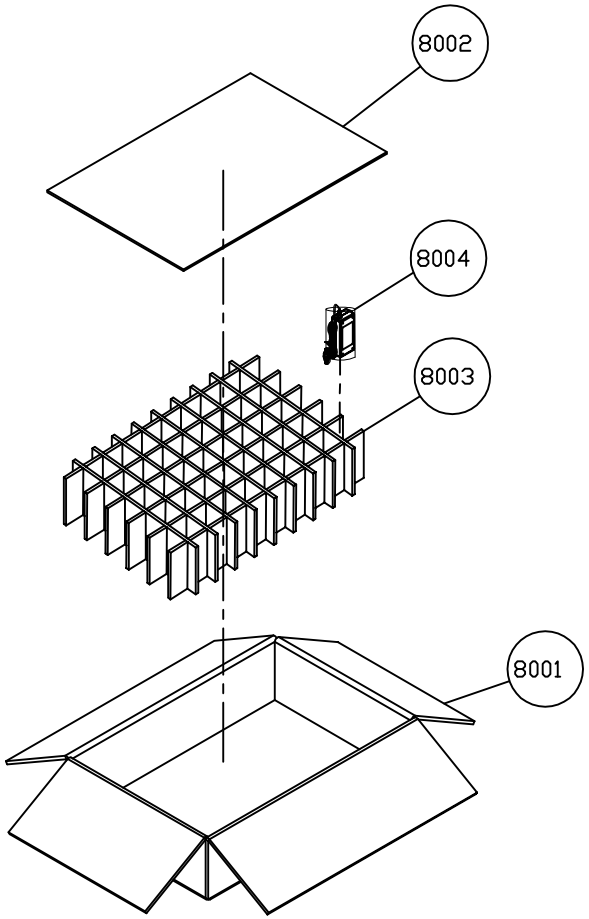

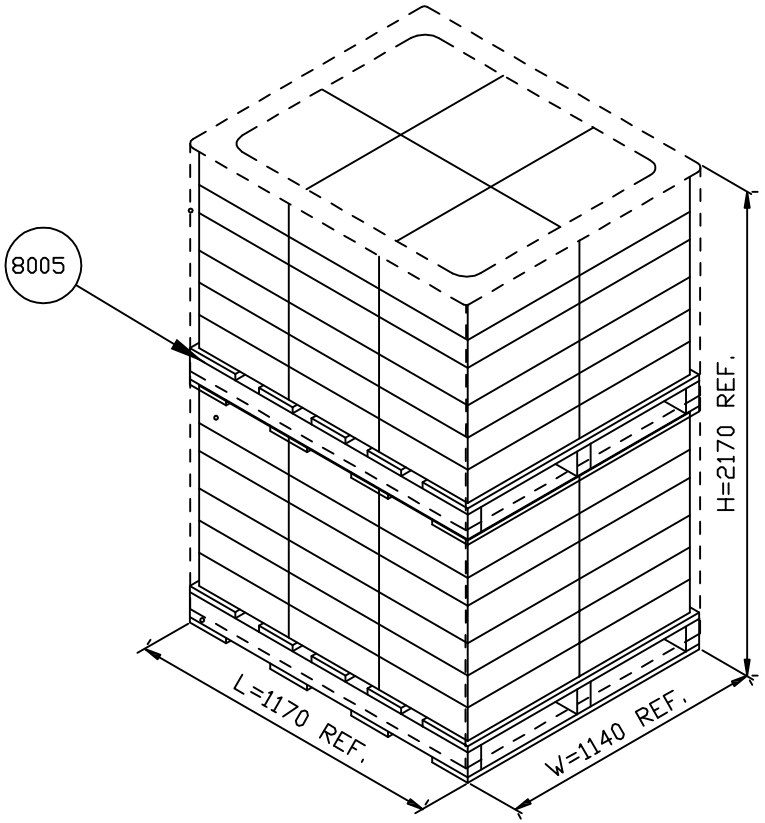

REVISION	DESCRIPTION	DATE	ZONE
A	RELEASED	MAY-30-2012	A1-D6

PRINTING DATE	MAY-30-2012	2D FILE	PACKING_PB-1240-6SA1	DESIGNER	Wen Yu			LITEON	TITLE: PACKING	PART NO.:
FINAL DATE	MAY-30-2012	3D FILE	————————	CHECKER		APPROVED			PROJECT: PB-1240-6SA1	DRAWING NO.: P-001156 REV.: A
UNIT: mm	SCALE:									