PART NUMBER	REV	FIRST USED	
680659-1	A	122500-1	OBSOLETE
680659-2	A	565435-5	
680659-3	A	354500-1	OBSOLETE

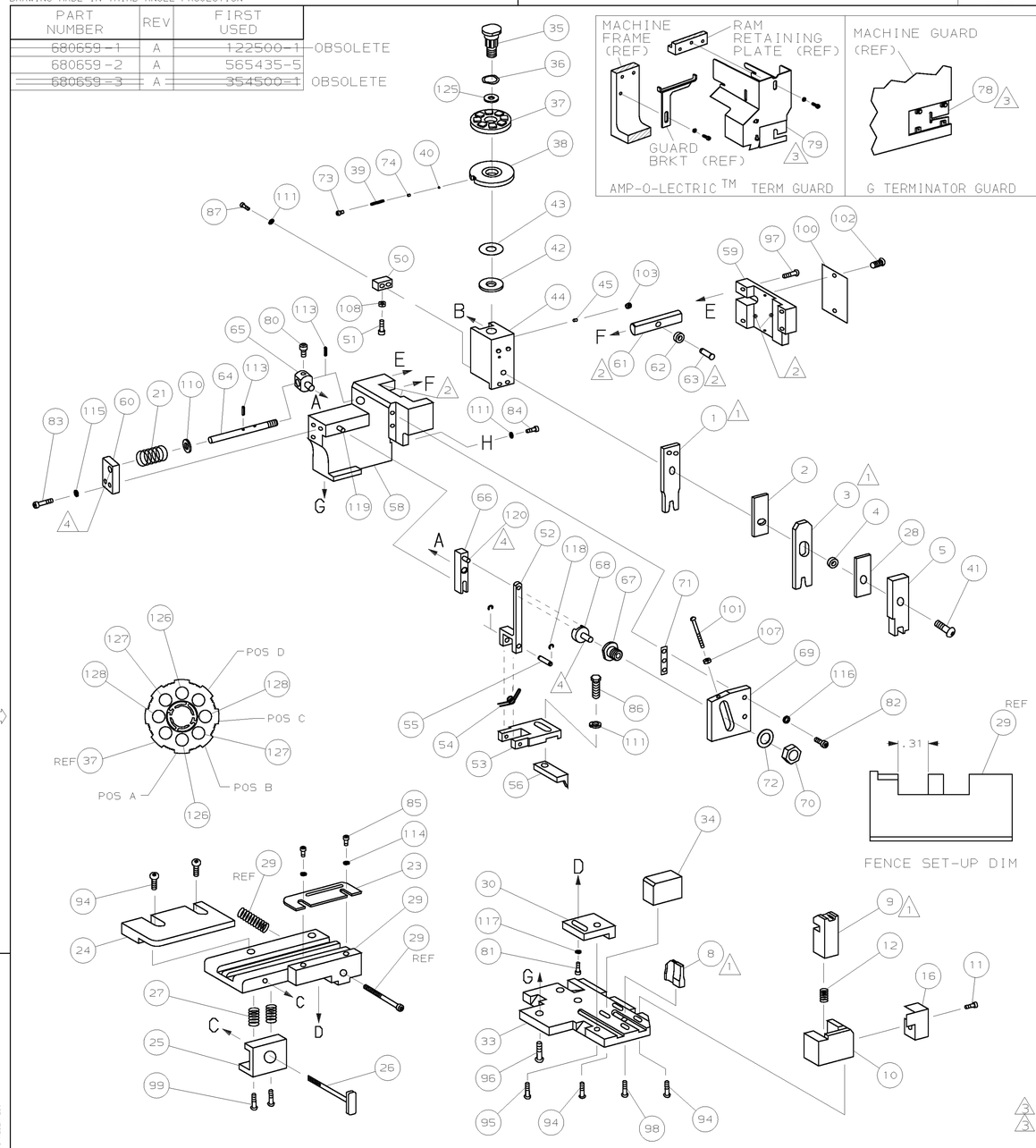

TERMINAL NAME: PIN CONTACT, SIZE 20 DF

788366

CRIMP DATA (AMP TERMINAL)

PAD LTR	CRIMP HEIGHT	WIRE SIZE
A	.023 ±.002 [0.58 ±0.05mm]	28
B	.022 ±.002 [0.56 ±0.05mm]	30
C	.021 ±.002 [0.53 ±0.05mm]	32
D	NOT	USED

CRIMP	SIZE	TYPE	RANGE
WIRE	.033 [0.84mm]	F	32-28
INSUL	.055 [1.40mm]	F	ø.030-.040

WIRE STRIP LENGTH	TERM APPL SPEC	FEED	APPL INSTRUCTION	SET UP GAGE	LAYOUT
.084-.104	114-10000	.300	408-8040	458637-1	L2099

-3	-2	-1	U/M	DWG SIZE	PART NO	DESCRIPTION	ITEM NO
							129
2	2	2	-	C	7-354779-5	PIN, WIRE DISC (.3365)C	128
2	2	2	-	C	7-354779-2	PIN, WIRE DISC (.3350)B	127
2	2	2	-	C	7-354779-1	PIN, WIRE DISC (.3345)A	126
	1		-	A	986950-1	WASHER, FLAT PRECISION	125
	1		-	A	217238-1	GENERAL INSTRUCTION PACKAGE	124
	1		-	-	4088040	SF APPL INST 408-8040	123
							122
							121
REF	REF	REF	-	A	1-21030-1	PIN,DOWEL(ø.187x.50)LEVER	120
REF	REF	REF	-	A	1-21030-6	PIN,DOWEL(ø.187x1.25)HOUSING	119
REF	REF	REF	-	A	21045-3	RING,RET "C"(ø.187)FD FING PIN	118
	1		-	A	21024-5	WASHER, LOCK(#10)ADJ BLOCK	117
REF	REF	REF	-	A	21024-5	WASHER,LOCK(#10)ADJ PLATE	116
REF	REF	REF	-	A	21024-5	WASHER,LOCK(#10)FEED GDE ROD	115
2	2	2	-	A	21024-2	WASHER,LOCK(#4)FRONT STP GUIDE	114
REF	REF	REF	-	A	5-21028-1	PIN,SLT SPR(ø.125x.50)ADJ ROD	113
							112
4	4	4	-	A	21024-4	WASHER,LOCK(#8)STRIPPER	111
REF	REF	REF	-	A	21899-4	WASHER,FLAT(ø5/16)SCREW ADJ	110
							109
	1		-	A	21018-5	NUT,HEX(NO.6)HOLDDOWN	108
REF	REF	REF	-	A	21068-5	NUT,HEX(6-32)FEED ADJ	107
							106
							105
	1	-	-	A	992031-1	PIN, CLEVIS	104
	1		-	A	21009-2	SCR,SKT SET(1/4-20x.25 LW)RAM	103
2	2	2	-	A	21017-2	SCR,DRIVE(#2x.19)ID PLATE	102
REF	REF	REF	-	A	6-23715-5	SCR,PAN HD(6-32x1.50)FEED ADJ	101
	1		-	B	461264-1	PLATE, IDENTIFICATION	100
2	2	2	-	A	3-21002-0	SCR,BHC(10-32x.88)DRAG	99
	1		-	A	22733-8	SCR,BHC(8-32x.38 LW)ANVIL	98
REF	REF	REF	-	A	2-21002-9	SCR,BHC(10-32x.75)CAP	97
REF	REF	REF	-	A	2-22733-8	SCR,BHC(1/4-20x.62)HOUSING	96
REF	REF	REF	-	A	2-21002-7	SCR,BHC(10-32x.50)SG ADJ BLOCK	95
6	6	6	-	A	2-21002-2	SCR,BHC(8-32x.50)TERM H DWN	94
							93
							92
	1		-	A	1-21002-7	SCR,BHC(6-32x.38)CAM	91
							90
	1	-	-	A	7-21000-9	SCR,SHC(4-40x.19)STRIPPER	89
							88
2	2	2	-	A	2-21000-7	SCR,SHC(8-32x.62)HOLD DOWN	87
	1		-	A	2-22603-0	SCR,HEX HD(8-32x.31)FEED FINGER	86
2	2	2	-	A	1-21000-3	SCR,SHC(4-40x.25)F ST GUIDE	85
	1		-	A	2-21000-7	SCR,SHC(8-32x.50)STRIPPER	84
REF	REF	REF	-	A	3-21000-7	SCR,SHC(10-32x.75)FEED ROD GD	83
REF	REF	REF	-	A	3-21000-6	SCR,SHC(10-32x.62)FD ADJ BLK	82
	1		-	A	3-21000-4	SCR,SHC(10-32x.38)SG ADJ BL	81
REF	REF	REF	-	A	3-21000-4	SCR,SHC(10-32x.38)PIVOT BLK	80
-	REF	-	-	B	455749-1	GUARD, WINDOW	79
REF	-	-	-	B	679532-1	INSERT, GUARD	78
							77
							76
							75
	1		-	A	690603-1	SPRING, ASSIST	74
	1		-	A	23030-1	SCR,SHC(6-32x.25 SL)INS DISC	73
REF	REF	REF	-	A	458109-1	WASHER, SPECIAL	72
REF	REF	REF	-	A	690517-1	SPACER	71

QTY REQD PER ASSY — PARTS LIST

-3	-2	-1	U/M	DWG SIZE	PART NO	DESCRIPTION	ITEM NO
-	-	-1	-	B	LEADMAKER	MECH POST FEED	OBSOLETE
		-2			BENCH MODEL K	MECH PRE FEED	
		-3			BENCH MODEL G	MECH PRE FEED	OBSOLETE
REF	REF	REF	-	B	22594-8	NUT,HEX(1/2-20)	70
REF	REF	REF	-	B	240628-1	PLATE, ADJUSTMENT	69
REF	REF	REF	-	B	240626-1	SHAFT, PIVOT	68
REF	REF	REF	-	B	240633-1	BUSHING	67
REF	REF	REF	-	A	455680-1	LEVER, INTERMEDIATE	66
REF	REF	REF	-	B	240629-1	BLOCK, PIVOT	65
REF	REF	REF	-	A	240632-2	SCREW, ADJ FEED ROD	64
REF	REF	REF	-	B	240659-3	PIN, CAM ROLLER	63
REF	REF	REF	-	B	240658-1	ROLLER, CAM	62
REF	REF	REF	-	B	454398-2	ROD, FEED	61
REF	REF	REF	-	A	454178-1	GUIDE, FEED ROD	60
REF	REF	REF	-	C	454220-1	CAP, RAM	59
REF	REF	REF	-	D	454485-1	HOUSING	58
							57
	1		-	B	690542-2	PAWL, FEED	56
REF	REF	REF	-	B	240624-1	PIN, FEED FINGER	55
REF	REF	REF	-	B	691499-1	SPRING, FEED FINGER	54
REF	REF	REF	-	B	690541-1	HOLDER, FEED FINGER	53
REF	REF	REF	-	A	455679-1	LEVER, TERMINAL FEED ARM	52
	1		-	A	811242-2	BUMPER, HOLDDOWN	51
	1		-	A	690753-1	SPACER, TONKER	50
	-	-	-	B	690602-6	CAM, PRE-FEED 1 5/8 ST	49
-	1	-	-	B	690602-5	CAM, PRE-FEED 1 1/8 ST	48
-	-		-	B	690501-4	CAM, POST-FEED 1 5/8 ST	47
	1		-	B	459456-1	APPLICATOR, BASIC (SUBASSY)	46
	1		-	A	690191-1	PLUG, NYLON	45
	1		-	C	455673-1	RAM	44
	1		-	A	690125-1	WASHER, LAMINATED	43
	1		-	A	690124-1	WASHER, RAM	42
	1		-	A	7-21002-9	BOLT, CRIMPER(5/16x1.00)	41
	1		-	A	23241-6	BALL, STEEL	40
	1		-	A	690170-1	SPRING, COMPRESSION	39
	1		-	C	690142-1	DISC, INSULATION	38
	1		-	D	354777-1	WIRE DISC, PLASTIC	37
	1		-	A	22480-5	WASHER, SPRING	36
	1		-	B	690212-1	POST, RAM	35
	1		-	B	690786-1	SUPPORT, TERMINAL	34
REF	REF	REF	-	D	455675-1	PLATE, BASE	33
							32
							31
REF	REF	REF	-	B	455689-1	BLOCK, STRIP GUIDE ADJ	30
	1		-	C	318042-1	STRIP GUIDE PLATE ASSY	29
	1		-	C	2-455888-0	SPACER, FRONT SHEAR DEP	28
2	2	2	-	A	1-22284-0	SPRING, DRAG	27
	1		-	B	690546-1	LEVER, DRAG RELEASE	26
	1		-	B	240792-1	DRAG, TERMINAL	25
	1		-	D	6-690504-4	GUIDE, STRIP (REAR)	24
	1		-	A	690438-1	GUIDE, STRIP (FRONT)	23
-	-		-	B	690472-2	STRIPPER	22
REF	REF	REF	-	A	4-22284-9	SPRING, FEED RETURN	21
	1	-	-	A	679218-1	STRIPPER WIRE STOP ASSY	20
	1	-	-	B	458949-1	STRIPPER	19
							18
							17
	1		-	B	318563-1	GUARD, CHIP, FRONT	16
							15
							14
							13
	1		-	A	5-22280-0	SPRING, SHEAR	12
	1		-	B	690461-1	STOP, SHEAR	11
	1		-	C	690459-1	HOLDER, SHEAR (FRONT)	10
	1		-	C	462006-1	SHEAR, FLOAT (FRONT)	9
	1		-	C	662181-1	ANVIL	8
							7
							6
	1		-	C	2-455889-0	DEPRESSOR, SHEAR (FRONT)	5
	1		-	B	2-238011-3	SPACER, BLOCK CRIMPER	4
	1		-	C	5-683453-2	CRIMPER, INSULATION	3
	1		-	C	455888-1	SPACER, CRIMPER	2
	1		-	C	456400-6	CRIMPER, WIRE	1

REVISION OF EACH ASSY NO (WHEN BLANK, USE DWG REVISION)

QTY REQD PER ASSY — PARTS LIST

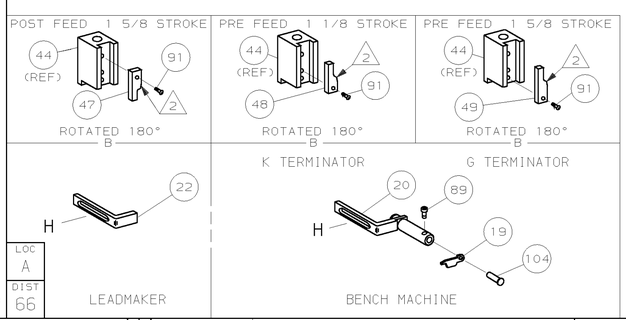

1. RECOMMENDED SPARE PARTS.
2. GREASE LIGHTLY.
3. GUARD MUST BE IN PLACE WHEN OPERATING APPLICATOR IN A BENCH MACHINE.
4. LUBRICATE DAILY USING NO. 20 MACHINE OIL.
5. ITEMS WITH QTY OF REF SPECIFIED (EXCEPT ITEMS 78 AND 79) ARE USED ON ITEM 46.

P	F	LTR	REVISION RECORD	APP	DATE
		A2	ECN 0150-0719-00	TE	7-03
		A1	0150-9287-99	LAC	CE
		A	REVISED	LAC	CE

DIMENSIONS IN INCHES. DO NOT SCALE PRINT. TOLERANCES UNLESS OTHERWISE SPECIFIED: 2 PLC DEC ±.02 3 PLC DEC ±- 4 PLC DEC ±- ANGLES ± - SURF TEXTURE, √ REMOVE BURRS, BREAK SHARP EDGES R.015 MAX

MATL – HT TR – FIN –

DR 09JUL98 L.COLLINS APP 09JUL98 T.ELBIN CHK 09JUL98 C. ERISMAN REL - -

AMP Incorporated Harrisburg, PA 17105-3608

NAME SIDE FEED HDM APPLICATOR MACHINE REF MINI APPL

SCALE – D DWG NO 680659 SHEET 1 OF 1 REV A2

CAGE CODE 00779 CUSTOMER AND ASSEMBLY DRAWING RESTRICTED TO –

THIS DRAWING IS A CONTROLLED DOCUMENT.

RELEASED FOR PUBLICATION APRIL 27, 1999

BY AMP INCORPORATED. ALL RIGHTS RESERVED.

COPYRIGHT 1999

LOC A DIST 66