THIS DRAWING IS UNPUBLISHED. RELEASED FOR PUBLICATION -,- .
© COPYRIGHT - BY TYCO ELECTRONICS CORPORATION. ALL INTERNATIONAL RIGHTS RESERVED.

LOC	DIST
—	—

REVISIONS

P	LTR	DESCRIPTION	DATE	DWN	APVD
	01	REVISED PER ECO-10-024560	10DEC10	HMR	NE

TERMINALS CONNECTED WHEN TOGGLE IN POSITIONS SHOWN.

PART NO	SWITCH ACTION CODE (*)	FLAT (3 2 1)	FLAT (3 2 1)	FLAT (3 2 1)
1825219-2	TT11AGPC104	OFF	NONE	3 TO 1
1825219-3	TT11DGPC104	2 TO 3	NONE	2 TO 1
1825219-6	TT11EGPC104	2 TO 3	OFF	2 TO 1

TERMINAL DESIGNATION NUMBERS ARE FOR REFERENCE ONLY, AND DO NOT APPEAR ON SWITCH.

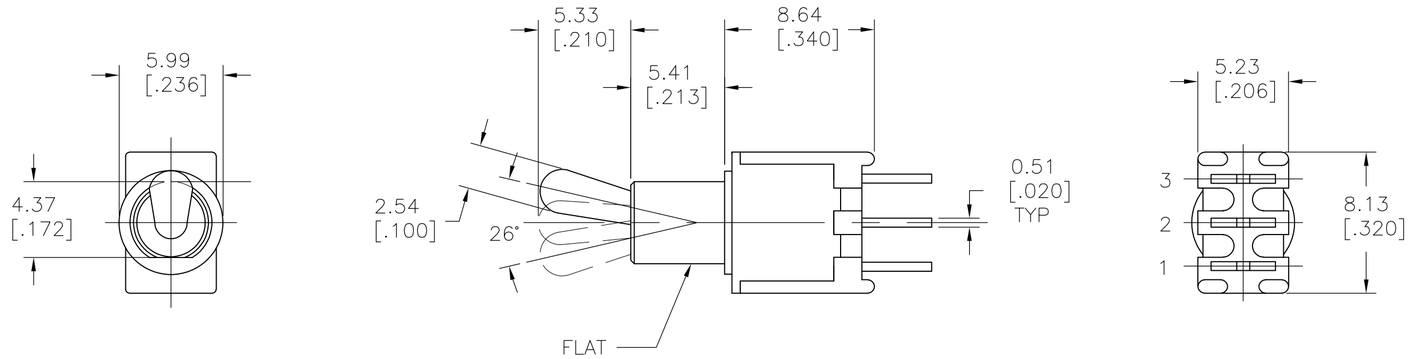

SPECIFICATION:

CURRENT RATING: 0.4VA MAX, 20V MAX. (AC/DC)
INITIAL CONTACT RESISTANCE: 20 MLLIOHMS MAX. @ 100mV AND 1mA
VOLTAGE WITHSTAND: 1000V AC BETWEEN TERMINALS AND CASE GROUND FOR ONE MINUTE

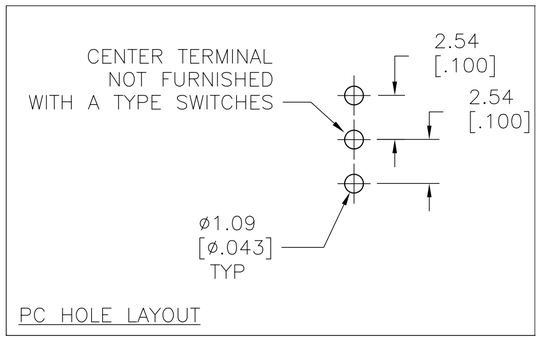

PC HOLE LAYOUT

1825219-2

THIS DRAWING IS A CONTROLLED DOCUMENT.

DIMENSIONS: mm [INCHES]

TOLERANCES UNLESS OTHERWISE SPECIFIED:
0 PLC ± -
1 PLC ± -
2 PLC ± -
3 PLC ± -
4 PLC ± -
ANGLES ± -

MATERIAL -
FINISH -

DWN RAGHAVENDRA 12AUG10
CHK EPPLEY NAZ 12AUG10
APVD EPPLEY NAZ 12AUG10
PRODUCT SPEC —
APPLICATION SPEC —
WEIGHT —

Tyco Electronics
Tyco Electronics Corporation
Harrisburg, PA 17105-3608

NAME SUBMIATURE TOGGLE SWITCH (SINGLE POLE-PC) (TT11AGPC104)

SIZE	CAGE CODE	DRAWING NO	RESTRICTED TO
A2	00779	C-1825219-2	—

CUSTOMER DRAWING | SCALE 4:1 | SHEET 1 OF 1 | REV 01