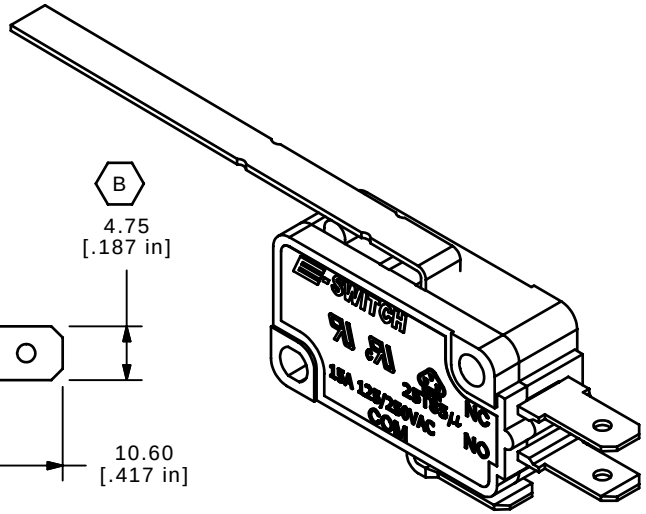

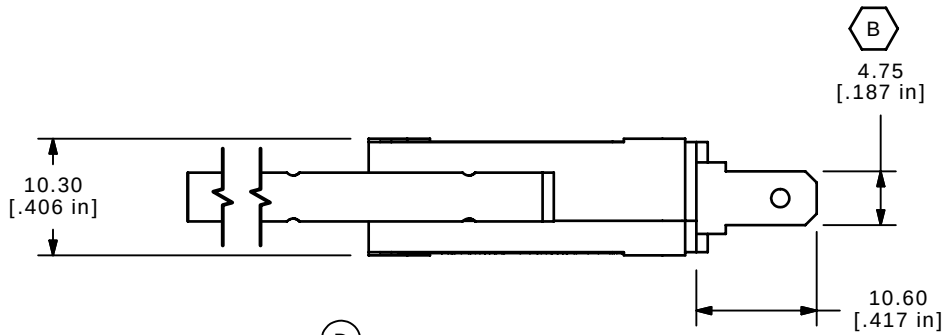

B ▲

O.P. (MM)	P.T. (MM)
15.3 ± 2.0	8.5 MAX.

D

O.P. = OPERATING POINT
P.T. = PRE-TRAVEL

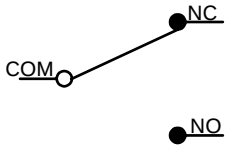

CIRCUIT: SPDT

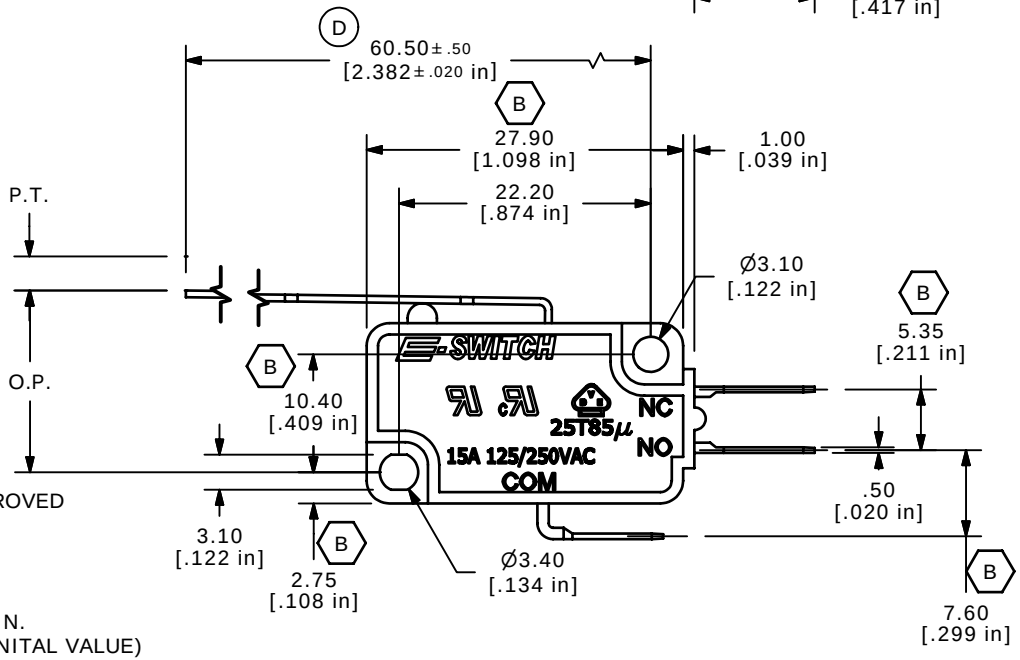

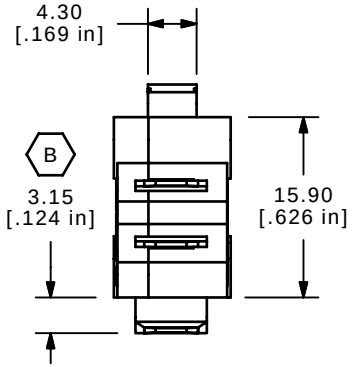

NOTES:
1. ALL DIMENSIONS IN MM [INCH]
2. GENERAL TOLERANCE: X.X=± 0.4
   X.XX=± 0.25
3. RATING: 15A @125/250VAC UL, CUL, VDE APPROVED
4. ▲ OPERATING FORCE: 40± 15 GRAMS
5. OPERATING TEMP: -25˚C TO 85˚C
6. ELECTRICAL LIFE: 50,000 CYCLES MIN.
7. MECHANICAL LIFE: 1,000,000 CYCLES TYP. D
8. INSULATION RESISTANCE: 100 MEGA-OHMS MIN.
9. DIELECTRIC STRENGTH: 1500VAC 1 MINUTE (INITAL VALUE)
10. CONTACT RESISTANCE: 100 MILLI -OHMS MAX.
11. ▲ DENOTES CRITICAL PARAMETER.
12. 2002/95/EC (ROHS) COMPLIANT D

REV	PCR NO	DESCRIPTION	DATE	BY
E	15647	REMOVED MAX. DIMENSION	1/3/05	PH
D	15599	CHANGES NOTED	12/12/05	PH
C	15058	CORRECTED DIMENSION	7/5/05	JB
B	14890	CHANGED DIMMENSIONS AND NOTES	5/2/05	JB
A	14712	RELEASED FOR PRODUCTION	3/9/05	AR

THE INFORMATION CONTAINED IN THIS DOCUMENT IS PROPRIETARY TO E-SWITCH AND IS NOT TO BE COPIED OR TRANSFERRED

E-SWITCH®

TITLE LS0851503F040C1A

SCALE	DATE	DR	DWG	REV
1.5:1	2/25/2005	AR	Q950002	E