SHEET OF

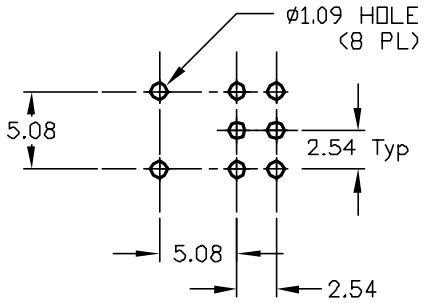

RECOMMENDED P.C.B LAYOUT

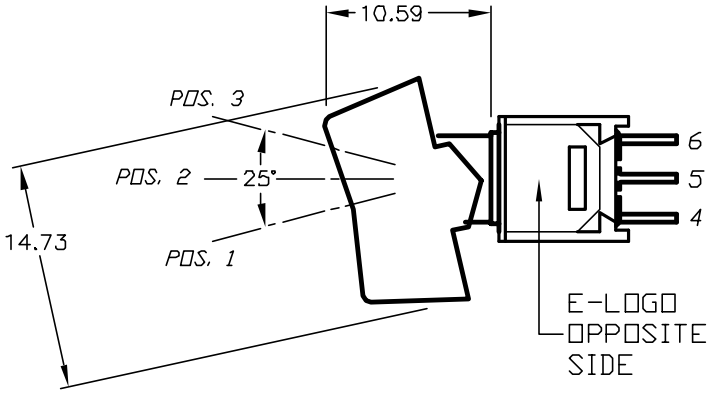

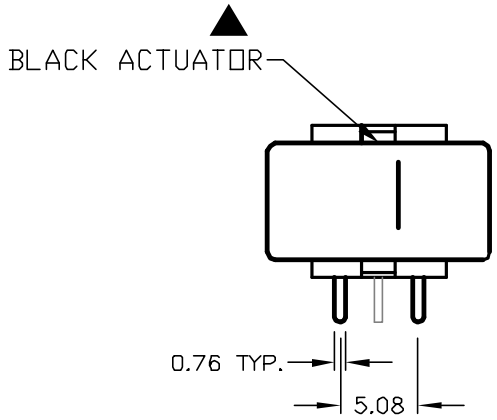

FRONT VIEW

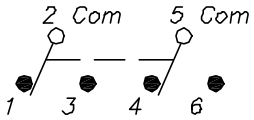

CIRCUIT: 2PDT

SWITCH FUNCTION		
POS. 1	POS. 2	POS. 3
ON	NONE	(ON)
2-3,5-6	OPEN	2-1,5-4

( )=Momentary

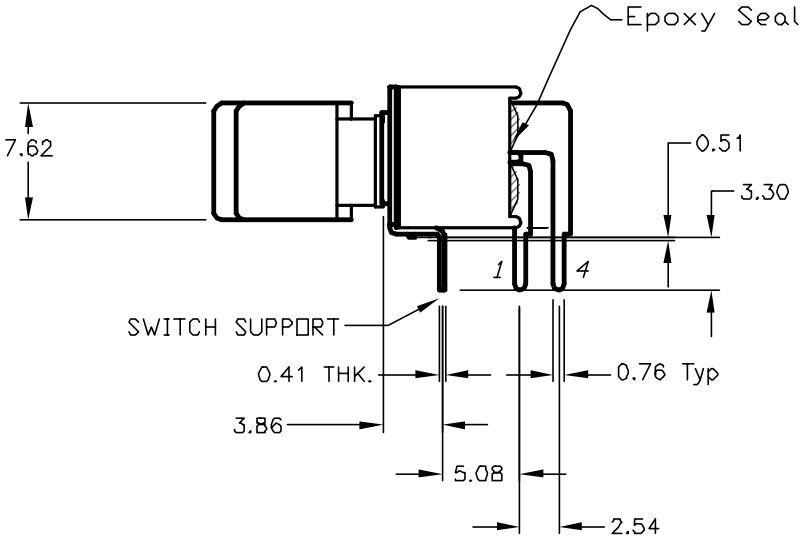

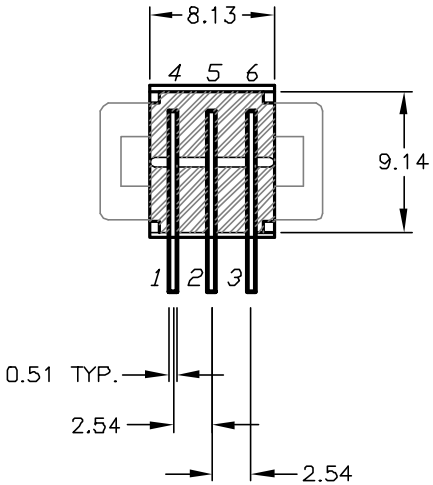

NOTES:

1. ALL DIMENSIONS IN MM
2. GENERAL TOLERANCE: X.X=±0.4
   X.XX=±0.25
3. TERM. NOS. FOR REF. ONLY
4. CONTACT RATING: 3A@ 120VAC. OR 28VDC:
   1A@ 250VAC.
5. FIXED TERMINAL & MOVING CONTACT:
   COPPER ALLOY w/ Silver plate
6. ELECTRIC LIFE: 30,000 make-and-break cycles
   at full load.
7. INSULATION RESISTANCE: 1,000 M ohm min.
8. DIELECTRIC STRENGTH: 1,000 V RMS @sea level.
9. OPERATING TEMP.: -30°C to +85°C

REV.	ECN No.	DESCRIPTION	DATE	CHKD
A	12341	REVISED AND REDRAWN	3/28/02	CJB

THE INFORMATION CONTAINED IN THIS DOCUMENT IS PROPRIETARY TO E-SWITCH AND IS NOT TO BE COPIED OR TRANSFERRED

E-SWITCH®

TITLE: 400 MDP-2 R1 (BLK) M6 QE

SCALE	DATE	DR	DWG	REV
2:1	3/28/02	CJB	T422006	A